

CENSUS OF INDIA 1961

VOLUME XV

UTTAR PRADESH

PART VII A

HANDICRAFTS SURVEY MONOGRAPH NO.

General Editor

P. P. BHATNAGAR

of the Indian Administrative Service

Superintendent of Census Operations, Uttar Pradesh

SILK TEXTILES INDUSTRY
IN
UTTAR PRADESH
with special reference to
MUBARAKPUR, AZAMGARH

BY

R. I. VERMA

of the Uttar Pradesh Civil Service

Deputy Superintendent of Census Operations

PRINTED IN INDIA BY THE SUPDT., PRINTING & STY., U.P., AT THE PREM PRESS, ALLAHABAD
AND
PUBLISHED BY THE MANAGER OF PUBLICATIONS, DELHI—8
1965

Price : (Inland) Rs. 2·20 (Foreign) 5 sh. 2 d. or 80 cents

CENSUS OF INDIA 1961

Central Government Publications

Census Report, Volume XV—Uttar Pradesh is published in the following parts:—

I—A (i—ii)	General Report
I—B	Report on Vital Statistics
I—C (i—vi)	Subsidiary Tables (in 6 books)
II—A	General Population Tables
II—B (i—vi)	General Economic Tables (in 6 books)
II—C (i—vi)	Cultural and Migration Tables (in 6 books)
III—A	Household Economic Tables
III—B	Household Economic Tables (concluded)
IV—A	Report on Housing and Establishments and Housing and Establishment Tables (E-Series Tables-Except E-III)
IV—B	Housing and Establishment Tables (E-III)
V—A (i—ii)	Special Tables for Scheduled Castes
V—B	Reprints from old Census Reports and Ethnographic Notes
VI	Village Survey Monographs (Monographs on selected Villages)
VII—A	Handicraft Survey Reports
VII—B	Fairs and Festivals in Uttar Pradesh
VIII—A	Administration Report on Enumeration (for official use only)
VIII—B	Administration Report on Tabulation (for official use only)
IX	Census Atlas of Uttar Pradesh
X	Special Report on Kanpur

State Government Publications

54 Volumes of District Census Handbooks

CONTENTS

		Page
FOREWORD	.. .. ..	i
PREFACE	.. .. ..	v
SECTION I		
SILK TEXTILES INDUSTRY IN UTTAR PRADESH		1
SECTION II		
SILK TEXTILES INDUSTRY AT MUBARAKPUR (AZAMGARH)		
I Introduction	.. .. ..	9
II Workers engaged in the Craft	.. .. ..	11
III Raw Materials, Tools and Technique	.. .. ..	14
IV Design	.. .. ..	19
V Cost of Production	.. .. ..	20
VI Marketing	.. .. ..	21
APPENDIX		
STATISTICAL TABLES	.. .. ..	23
I Schedule of Industries and Crafts	.. .. ..	25
II List of Wholesale Dealers in Mubarakpur	.. .. ..	31
III List of Brokers & Commission Agents in Mubarakpur	.. ..	32

LIST OF TABLES

		Page
I	Number of Industrial Units and Number of Persons employed in Production ..	23
II	Distribution of Artisans Communities in Units surveyed	23
III	Distribution of Articles by Materials used	23
IV	Designs	24
V	Consumption and Sale	24
VI	Cost of Production, Sale Price and Earnings	24
VII	List of skilled Craftsmen	24

MAPS AND ILLUSTRATIONS

I MAPS

1. Map of Uttar Pradesh showing workers engaged in Silk Textiles — *Facing page* 1
2. Notional map showing location of Mubarakpur (Azamgarh) — 9

II ILLUSTRATIONS

I	The Pit-loom	*Between pages*	4—5
II	*Paraita* and *Charkha*	..	14—15
III	*Paraita*	..	14—15
IV	*Natawa* or *Natai*	..	14—15
V	*Salai*	..	16—17
VI	Arranging of the warp threads	..	16—17
VII	Shuttle	..	16—17
VIII	Heald or *Bai*	..	16—17
IX	Jacquard machine and harness	..	16—17
X	Weaver at the loom	..	16—17
XI	Weaving in progress	..	16—17
XII	*Nagsi* or *Karihal*	..	18—19
XIII	*Chunari*	..	18—19
XIV	*Phulwar* or *Jungla*	..	18—19
XV	*Skat*	..	18—19

FOREWORD

One of the first steps to be taken in the First Five Year Plan was the establishment of six Boards for the promotion of handicrafts, village and small industries. (1) The Khadi and Village Industries Board; (2) The All-India Handicrafts Board; (3) The All-India Handloom Board; (4) The Central Silk Board; (5) The Coir Board; and (6) The Small Industries Board.

The rapid expansion of the activities of these Boards which concentrated not only on production and techniques, but also on organisation, extension, credit, marketing, and export, consolidated and enlarged the position that the household industries sector had so long enjoyed in the nation's economic life. It was this fact that forced itself upon the preparations for the 1961 Census and demanded that household industry should be separately investigated for a proper accounting of the nation's manpower, resources and its specific contribution to the national income. The 1961 Census therefore asked a special series of questions on household industry, input of family and hired labour, and the periods over which household industry is conducted. It was felt, however, that an enumeration of the total number of establishments and their industrial classification would be incomplete without a proper description of what they produce and how they produce. It was important to make an assessment of the limits of rigidity within which traditional skill operates. This could be obtained by studying the caste, occupational, social and economic stratifications, the limitations of credit and marketing facilities, the dominance of custom over contract, the persistence of traditional tools and design forms, the physical limitations of transport, communication and mobility, the inability to adopt new lines or adapt to changing circumstances. It was important also to make an assessment of the limits of flexibility that traditional skill is capable of, because the transformation of traditional skills to modern skills is easier said than done and a thorough study may well reveal that it is perhaps cheaper from the social point of view to develop industrial skills from scratch than to try to graft traditional skill on alien soil. A rather tragic case of failure to make what would on the face of it seem a minor adjustment cast its heavy shadow on the nation when it was discovered that goldsmiths used to working on 22-carat gold all their lives felt sadly helpless when asked to work on 14-carat, so narrow and unadaptable were the limits of their skill and proficiency and so rudimentary the tools and equipment with which they and their forefathers had worked. This fiscal accident revealed that tools are even more important than skills.

An early opportunity was therefore taken in February 1960 to suggest to State Census Superintendents, that the Census provided a unique opportunity for conducting and documenting a survey of this kind. As such a survey was quite outside the usual terms of reference of Census work it was thought prudent cautiously to feel one's way with the thin end of the wedge of what would, it was hoped, prove to be an exciting pursuit. It was therefore considered the wiser course to wait until the State Census Offices felt so interested that they would no longer take the inquiry as an imposition but rather want to do it on their own and ask for the necessary staff and equipment. This office, too, in its turn, could make use of the interval to organise and elaborate the design of inquiry in order to feed the appetite that work in progress would serve to whet. Because it was a labour of love, sought to be unobtrusively thrust on one's colleagues and because the inquiry itself was so vast that normally it would demand in any country as big a set-up, if separately established, as the Census organisation itself and that over a much longer period, and because it was almost a pioneer venture, nothing like it having been undertaken since the 1880's, it was decided to move towards a build-up by stages, to let the inquiry unfold itself only as fast as my colleagues chose to ask for more.

Thus, in the first circular of 18 February 1960, it was suggested that the inquiry might be conducted through the agency of the Development Department, the State Director of Industries, the Director of Tribal Welfare, the Registrar of Co-operative Societies, and other organisations concerned with the promotion of household industry. A draft questionnaire containing 30 questions in three parts was recommended for canvassing. It was suggested that information on this questionnaire, village by village and area by area, might either be obtained through the regular departmental channels of the State Government, or through the newly set up Census organisation, or through the hierarchy of the newly-created Panchayets. Stress was laid on the need of photographic documentation and illustration of designs, shapes and forms not only by photographs but with the help of line drawings or sketches together with a full description of the materials used.

Almost the whole of 1960 and the first half of 1961 were spent in organising and taking the census count, although several States even during this period had not allowed the grass to grow under their feet but made exploratory studies and decided in their minds how the inquiry should be organised. A series of regional conferences held in Trivandrum, Darjeeling and Srinagar in May and June 1961 revealed much enthusiasm among State Superintendents to proceed with the survey, but the need of separate staff and equipment was felt at the same time as the realization dawned that this was much too serious an inquiry to be treated casually and left to be achieved through the usual administrative channels and State Census Superintendents proceeded to augment their staff with qualified research and investigating officers, technical persons, photographers, artists, draughtsmen and other trained personnel.

This was followed by rapid progress in coordination between the Central and State Census offices in the matter of exchange and processing of information, documentation and investigation, of assisting each other with trained investigators and in editing and finalizing drafts, layouts, presentations.

Mention has been made of a questionnaire in three parts and thirty questions. The idea was to make a beginning with empirical, analytical studies based on a structured questionnaire which would replace general descriptive accounts that had obtained so far. The primary aim was to obtain a picture as much of the artisan himself as of his craft, to obtain a perspective of the artisan and his craft in his social and economic setting, the extent to which tradition bound him and the winds of change ruffled him, the extent of his mobility and immobility, the conditions of market, credit, new contacts and designs in which he operated, the frame of new as well as traditional producer-customer relationships in which he still worked, and how far he was ready to pierce his own caste-tribe socio-economic cocoon and make a break through to new opportunities promised by the Five Year Plans. The aim was to hold up the mirror to hereditary skills struggling with the dialectics of tradition and change.

Thus the first part of the questionnaire, purporting to be a village schedule, sought to take account of the size and population of the village, its remoteness from or proximity to centres of trade and commerce, in short, the degree of isolation in which the artisan worked and the relative strengths of various communities in the village which would afford clues to social interdependence and the prevalence of the *jajmani* system. The second part was devoted to artisan communities in the village: the several castes of artisans, the number of families in each, the total number of workers, males and females, the extent of co-operative activity among them, the extent of dependence upon employers and of wage or contract labour. There were questions on the raw materials used, the means of their procurement, the possible extent of dependence on others for raw materials, the extent of the material that artisans can handle within the limits of their skill. There were other questions on the exchange and flow of designs, the use of colours, the ancientness of the craft and legends associated, the colonization of the craftsman, on patrons and customers and on social and economic contact with the world inside and outside the village. There were specific questions on the workshop itself and particularly the tools and the source of supply of these tools, because it was felt that tools decide everything and are the surest index of inertness or flexibility. Separate blocks of questions were designed to bring out the ramifications of artisan castes throughout the country and the ways they sustained themselves, the type of clientele they catered for, the extent to which they operated on money or barter or service, how specialized their craft was, how wide the market, how dependent they were on their socially preordained clientele and how restricted the latter was by the seemingly unalterable laws of social custom, the extent to which they could operate in the open market, the range of their wares and the sizes to which these were ordinarily restricted either by the limits of their own skill or the length of their customers' purse strings. Inquiries were to be made about the operation of middlemen and of co-operative societies, the people who gave new designs and demanded new products. Finally the several stages of production of the articles themselves were to be fully described including the final and finishing stage and a list of very skilled craftsmen of each community was to be furnished. The third part was devoted specially to tribal communities and designed to find out how self-sufficient or dependent they were on the production and supply of manufactured goods, the extent to which they produced themselves or depended on others, their contacts with other communities and the specific forms of production and commerce through which these contacts were maintained.

Particular emphasis was laid on the need of obtaining as full an account as possible of unique regional design differentiations as they reflect not only the very culture patterns of the country but the persistent inventive faculties of the craftsmen. The importance was emphasised of giving full attention to articles of domestic use as it is in their shapes, designs and forms that the culture patterns and traditional skills persist most tenaciously.

Simultaneously with the investigation of specific crafts, State Superintendents proceeded to compile a comprehensive list of all types of handicrafts obtaining in their State. As for the specific Crafts to be investigated several tables were devised from the structured questionnaire in order to guide investigators towards pointed observation and analysis, to enable them to write, not just general descriptions, but with their eye on the object and on facts.

Investigations conducted between September 196 and May 1962, including a study group of all State and the Social Studies Division in December 1961 a Delhi, stimulated many of the States into going in fo a much enlarged schedule. The revised village schedul itself, the counterpart of the first part of the February 1960 schedule, contained 19 large sections containing elaborate and probing questions. The Family Schedule for practising artisan families similarly contained 19 main questions each sub-divided into many questions. The Family Schedule for non-practising artisan families contained 21 questions. There were schedules for the study of co-operative societies, of production-cum-training centres, and of consumer's preference. This enlarged schedule of investigation, in the formulation of which the States themselves actively assisted, was greatly welcomed. The surveys that will appear in this series will, therefore, consist of two main types: (a) those based on the original short schedule and (b) those based on the much enlarged schedule. In some cases Census Superintendents felt enthused enough to scrap the work based on the original short schedule and do it over again on the enlarged schedule. In the meantime much experience was gained on the analysis of facts and figures to clothe each observation with plenty

of authentic information so that the reader could make his own judgement instead of being expected to see all the time through another pair of eyes.

This programme of survey of handicrafts and household industries has been fortified by several ancillary surveys, each one of which would deserve major attention. Along with the survey a compilation has been made of all handicraft centres in each State and an inventory prepared of skilled craftsmen. Photographic and other documentation has been built up to constitute what may now be regarded as the most considerable repository in the country. Elaborate and accurate maps of craft centres in taluks, tehsils and districts are either ready or under preparation. A full census of all fairs and festivals, weekly hats and markets, throughout India, has been taken and is being published for the first time. Andhra Pradesh has embarked upon a project of chronicling the social and religious antiquity and uniqueness of every fair and festival. A separate volume will be devoted to each district which promises to be of the utmost value to sociologists and orientalists. A full and complete inventory, replete with sketches and measurements of every object, has been prepared of exhibits in museums of tribal crafts in India. There has been a fairly satisfactory survey of houses and buildings, indigenous architectural designs and use of local building material of the whole country. All this has been entirely a labour of love, patiently organised and executed under great strain and in disregard of health and comfort, for which I take this opportunity of expressing my appreciation and grateful thanks to my colleagues.

New Delhi
July 30, 1964

ASOK MITRA
Registrar General, India

PREFACE

At the 1961 Census, a detailed study of household industries and industrial establishments was undertaken. Special questions on household industry and working establishments were introduced in the Household Schedule and the Houselist with a view to obtaining a sort of frame for all kinds of industries in the country. This information was further supplemented by the detailed survey of a few handicrafts. For Uttar Pradesh the following handicrafts were selected :—

(i) Cotton Textiles
(ii) Silk Textiles
(iii) Pottery
(iv) Woollen Carpets and Blankets
(v) Leather Footwear
(vi) Basketry
(vii) Brass and Copperware

2. This survey was conducted in two parts. One was a General Survey carried out in every village, and the other was a special survey undertaken at the following selected places noted for these handicrafts.

(i) Cotton Textiles at Mau Nath Bhanjan, District Azamgarh
(ii) Silk Textiles at Mubarakpur, District Azamgarh
(iii) Pottery at Khurja, District Bulandshahr, and Chunar, District Mirzapur
(iv) Woollen Carpets at Shahjahanpur and Woollen Blankets at Muzaffarnagar
(v) Leather Footwear at Kanpur
(vi) Basketry at Allahabad
(vii) Brass and Copperware at Varanasi

3. The General Survey was conducted by the planning staff, *viz.*, Block Development Officers, Assistant Development Officers (Industries), Assistant Development Officers (Panchayats), Panchayat Inspectors, Village Level Workers and Panchayat Secretaries, to whom training was imparted by the regional Deputy Superintendents. A draft Village Schedule for collecting the desired information had been circulated by the Registrar General, India in February, 1960. Its printed copies in Hindi together with instructions were supplied to districts by the middle of 1961. Regional Deputy Superintendents remained in close touch with the work and undertook the scrutiny of filled-up Schedules. The information contained in the Schedules was processed and analysed in the Social Studies Unit at Lucknow for being utilised in the writing of Monographs.

4. Investigators were appointed for the Special Survey. The Village Schedule was adopted with necessary modifications. It was decided to fill-up one Schedule for every establishment except where it was impracticable on account of the large number of establishments. In such cases it was thought sufficient to conduct the Survey on Stratified Random Sampling basis, covering 150-250 randomly selected units. Samples were drawn from the Houselist after correcting it through an actual count in *mohallas*.

5. This volume has two Sections, *viz.*, Silk Textiles Industry in Uttar Pradesh and Silk Textiles Industry at Mubarakpur, District Azamgarh. Sarvashri S. A. Shastri and S. C. Sharma, investigators collected the data in 1961-62 by filling up Schedules of all units engaged in the manufacture of Silk Textiles at Mubarakpur. Shri R. I. Verma, Deputy Census Superintendent, of the Uttar Pradesh Civil Service, personally visited the centre for acquiring first-hand knowledge of the handicraft. He is responsible for supervising the investigation, analysing the data and drafting the report. The draft monograph was revised by him in the light of comments received from Dr. B. K. Roy Burman, Officer on Special Duty (Handicrafts and Social Studies) in the Office of Registrar General, India.

6. Opinions expressed and conclusions reached by the author of this monograph are based on the results of the investigation. They are his own and do not reflect the views of Government in any way.

P. P. Bhatnagar
Superintendent of Census Operations,
Uttar Pradesh.

Lucknow :
The 27th, May 1964

SECTION I
SILK TEXTILES INDUSTRY IN UTTAR PRADESH



PSUP-AD-10 CENSUS-1964-850-(OFFSET).

Silk Industry in Uttar Pradesh

Silk industry in Uttar Pradesh is essentially a home industry, practised by a large number of weavers scattered in different parts of the State. Though the number of power looms is increasing in the State, year after year, yet the value of well-designed and exquisitely colourful handmade silk fabrics is recognised. They cater to the aesthetic taste of people who love finery and ornament. The beautiful silk fabrics of old and lovely traditional designs have survived through ages and still continue to remind us of our precious heritage. The industry plays an important role in the national economy by earning foreign exchange and providing employment to a large number of skilled weavers.

Two types of Surveys, the general and the intensive, were undertaken in the State to study the silk industry. The general survey was conducted by the Census Organisation in 1961-62 through the agency of the Planning Department. The particulars were collected through a Village Craft Schedule prescribed by the office of the Registrar General of India. The Schedule was translated into Hindi and sent to districts. They were filled by Panchayat Secretaries and Village Level Workers and sent to Deputy Census Superintendents through the District Planning Officers or Block Development Officers. Units manufacturing silk fabrics in urban areas were excluded because they did not fall within the jurisdiction of the agency which conducted the survey. On the basis of the information contained in the filled-in Schedules, Tables were prepared and used for interpreting the data so collected. An intensive study of the silk industry was undertaken at Mubarakpur in district Azamgarh by the Census organisation through its own agency.

Workers in the industry

Workers engaged in the manufacture of silk fabrics on power looms were excluded from the general survey. The information collected through the Village Craft Schedules showed that silk fabrics are manufactured in 93 villages of 6 districts. The number of families and persons engaged in the craft as a household industry is 3,316 and 8,891 respectively. Taking the labour force as a whole 64·28 per cent i. e. 5,716 workers are males and 35·72 per cent i. e. 3,175 workers females. Child workers were not counted though they assist their parents in different processes of manufacture of silk fabrics. Some of them work as apprentices. More often the children work in the industry because they are forced in it due to the financial inability of their parents to give them education.

The single weaver is the common unit. He is assisted by other members of the household. A few units employ skilled weavers, give them dyed thread and pay on piece rate basis according to work load. The organised co-operation of the workers is absent. The Table given below shows the number of villages by districts and workers engaged in this craft with sex breakdown :

District	Total Number of Villages	Number of Families	Workers		
			Persons	Males	Females
Faizabad	2	19	58	28	20
Pratapgarh	3	136	485	232	253
Azamgarh	1	35	115	64	51
Jaunpur	3	20	59	49	10
Varanasi	70	2,906	7,514	4,869	2,645
Mirzapur	14	200	660	474	186
Total :	93	3,316	8,891	5,716	3,175

Districts with the highest number of workers engaged in the craft are Varanasi (7, 574 workers) and Mirzapur (660 workers). On an average a village has 36 families of workers but the variation from this average is considerable. In Jaunpur for example, 3 villages have 20 families but in Pratapgarh 3 villages have as many as 136 families giving an average of 45 families per village. The manufacturing unit per household, on an average, consists of 3 workers. Among workers, males exceed the females in districts Faizabad, Azamgarh, Jaunpur, Varanasi and Mirzapur but in districts Pratapgarh, the female workers are more than the male workers.

Table B-IV Part C prepared from the data collected at the 1961 Census gives a comprehensive picture

of workers engaged in manufacture of silk textile by handloom (covered by Industrial Code No. 264) because it covered rural as well as urban areas. It also gives the number of workers in the household industry and non-household industry separately. The following statement based on this Table gives better idea of the extent to which this craft is practised in some of the districts of the State :

District	Rural				Urban				Total
	At Household Industry		At Non-Household Industry		At Household Industry		At Non-Household Industry		
	M	F	M	F	M	F	M	F	
Uttar Pradesh	8,326	784	2,986	39	21,678	4,618	1,589	20	40,040
1. Naini Tal	..	..	..	..	..	1	..	..	1
2. Moradabad	..	..	..	..	8	..	..	..	8
3. Budaun	..	..	..	..	..	..	1	..	1
4. Dehra Dun	..	..	..	..	..	..	2	1	3
5. Saharanpur	..	..	..	..	1	..	..	..	1
6. Meerut	1	..	1	..	..	..	..	..	2
7. Mathura	..	..	..	..	..	4	..	..	4
8. Agra	..	..	..	..	3	..	5	..	8
9. Kanpur	..	..	..	..	..	..	2	..	2
10. Faizabad	..	..	..	..	2	..	..	..	2
11. Azamgarh	213	6	23	..	681	1,248	34	2	2,207
12. Jaunpur	12	7	13	..	..	..	..	..	32
13. Ghazipur	60	3	24	..	..	..	..	..	87
14. Varanasi	7,694	768	2,788	39	20,978	3,365	1,540	17	37,189
15. Mirzapur	346	..	137	..	5	..	5	..	493

Majority of weavers i. e., 69·69 per cent (27,905) are in urban areas and the remaining 31·31 per cent (12, 135) in the rural areas. The males predominate in the craft. Among the workers 89·86 per cent are males and 11·14 per cent females. The percentage of female workers in the urban and rural areas is 16·6 and 6·7 respectively. Silk weaving is a household industry in the State. The percentage of weavers who work on looms in their homes is 88·42. 94·2 per cent workers in urban area and 75·1 per cent in rural area were found engaged in it as a household industry.

The largest number of weavers engaged in manufacture of silk fabrics is in Varanasi (37,189), Azamgarh (2,207) and Mirzapur (493). In other districts their number is small. Varanasi (Banaras) is famous for its very elaborate brocades and silk sarees. Silk sarees are mainly manufactured at Mubarakpur in district Azamgarh. *Razai* pieces, *chaddars* and piece goods in stripes are made in Mirzapur. Silk goods are not manufactured in Uttarakhand, Jhansi and Lucknow Divisions.

The figures given in the two Tables—Table B-IV, Part C and the Table prepared from the information available from filled-in schedules—show wide variations. The variations in figures of rural area collected through the two sources may be attributed to the following reasons :

(1) The survey and the Census figures do not relate to the same period of reference. Table B-IV, part C was prepared from the figures collected at the 1961 Census. The survey was conducted after the Census.

(2) It seems that some of the villages where the number of silk-weavers was too small or the existence of this craft was not within the knowledge of Panchayat Secretaries or Village Level workers, were inadvertently left unsurveyed. There was almost no possibility of any such omission at the time of Census.

(3) In Table B-IV, Part C only those persons have been included who returned manufacture of silk fabrics as their main occupation, while in the survey even those persons were, in some cases, included who practised it as a secondary occupation. As a result, in some districts, particularly Faizabad and Jaunpur, the number of persons counted at the survey was larger than that entered in Table B-IV, Part C.

Castes engaged in the industry

The Table given below based on the information contained in the filled-in schedules of general survey shows the number of workers of various castes in the craft ;

Name of Caste	Workers		
	Persons	Males	Females
Julaha	6,159	3,624	2,535
Kurmi	729	640	89
Chamar	586	437	149
Mallah	306	250	56
Kori	322	223	99
Rajbhar	186	165	21
Karwal	165	80	85
Ahir	74	59	15
Bind	78	57	21
Sheikh	28	14	14
Kunbi	43	27	16
Kumhar	27	18	9
Brahmin	40	24	16
Teli	29	18	11
Pasi	6	6	-
Lonia	5	4	1
Dharkar	4	3	1
Gond	8	7	1
Sonar	6	4	2
Khatik	2	2	-
Kshattriya	15	15	-
Halwai	2	1	1
Kewat	4	2	2
Pathan	22	11	11
Dhuria	30	15	15
Darzi	3	1	2
Faqir	3	1	2
Kalwar	9	8	1
Total:	8,891	5,716	3,175

Traditionally the weaving of silk fabrics has been in the hands of the *Julahas*. They constitute 69·2 per cent of the population of weavers in the State. The *Julahas* are skillful weavers and do not favour change of occupation. They display strong clannish feelings and help one another in times of need. The children are generally given religious education which fosters an outlook congenial to the traditional craft of the family. A good many weavers belong to Kurmi (729), Chamar (586), Kori (322) and Mallah (306) castes. With the weakening of strict adherence to caste principles, the higher castes have also drifted to this work. The number of Brahmin and Kshattriya weavers is 40 and 15 respectively. The number of weavers caste and district-wise is given below :

District	Caste	Persons
1. Faizabad	Pathan	22
	Dhuria	30
	Darzi	3
	Faqir	3
2. Pratapgarh	Julaha	485
3. Azamgarh	Julaha	115
4. Jaunpur	Julaha	59
5. Varanasi	Julaha	4,985
	Kurmi	633
	Chamar	556
	Mallah	306
	Kori	322
	Rajbhar	186
	Karwal	165
	Ahir	64
	Bind	78
	Sheikh	28
	Kunbi	43
	Kumhar	27
	Brahmin	40
	Teli	29
	Pasi	6
	Lonia	5
	Dharkar	4
	Gond	8
	Sonar	6
	Khatik	2
	Kshattriya	15
	Halwai	2
	Kewat	4
6. Mirzapur	Julaha	515
	Kurmi	96
	Chamar	30
	Ahir	10
	Kalwar	9
		8,891

Raw Material

Raw silk was not produced in any part of the State till 1948. The Government realised that development of silk industry was interlinked with the development of sericulture. The scheme for the development of sericulture was first initiated in district Dehra Dun in 1948. Since then the industry has made considerable progress and the scheme has been extended to Garhwal, Naini Tal, Saharanpur, Etawah and Gorakhpur districts. A research section for conducting experiments on soil, mulberry leaves and silk rearing has been established at Premnagar in Dehra Dun. The area brought under Government mulberry farms and nurseries and under private plantation totalled to 13,555 and 77,295 acres respectively by the end of Second Plan period (December 31, 1960). As against the production of 61,005 lbs. cocoons during the First Plan period, its production increased to 241,947 lbs. during the end of Second Plan period. The number of silkworm rearer families has also gone up from 414 at the close of the First Five Year Plan to 3,536 during the Second Plan.

Encouraged by the success of the scheme, the Government have formulated an ambitious programme for implementation during the Third Five Year Plan. An outlay of Rs. 35 lakhs has been made in the Plan for extending the operation of the scheme to 2 more districts of the State viz., Almora and Tehri Garhwal, besides the intensification of its activities in existing areas, viz., Dehra Dun, Naini Tal, Garhwal and Saharanpur in hilly and sub-mountainous region and Etawah and Gorakhpur districts in the plain. Arrangements have been made for undertaking research in breeding, reeling, moriculture and soil study for developing the industry on scientific lines. Expansion of training programme, financial assistance to the cooperatives and extensive plantation of mulberry trees in collaboration with Forest Department have been undertaken. It is proposed to produce 2·16 lakh kilogram of cocoons and impart training to 235 persons during the Third Plan period.

The sericulture industry has provided occupation to a large number of rural families. As rearing of silk worms is a domestic activity, a large number of women generally find employment in the industry. The rearing activities have proved a very good source of subsidiary income to rearers. Some rearers earned Rs. 650 each during 1961-62.

Marketing of cocoons raised by the rearers is of great importance. Realising the importance of creating stable marketing conditions, efforts were made to organise cooperative societies of the silk worm rearers who could take up the marketing of cocoons. As a result of concerted efforts, 21 primary co-operative societies were organised during the last three years (1959-61) and an apex body has also been set up and registered at Dehra Dun. The Industries Department has provided financial assistance to these societies in the shape of loans and grants.

During 1961-62 the apex body known as Uttar Pradesh Resham Udyogig Sahkari Sangh purchased cocoons worth Rs. 80,000 from rearers and made arrangement for their disposal at a profit of about Rs. 25,000. The organisation was able to distribute bonus to rearer members as well. The Industries Department gave to the Sangh a grant of Rs. 9,300 during 1961-62 for utilisation of sub-standard quality cocoon and hand spinning of pierced and inferior cocoons. It has also been provided with a loan of Rs. 10,000 during the period for working capital. Some of the primary co-operative societies also received grant from the Department during 1961-62 for fencing materials, manure and fertilisers and irrigation facilities.

The raw silk produced in the State is of different kinds known as *tana* i. e. raw silk fit to be used as warp thread and *bana* i. e., raw silk for use as weft thread. *Tana* and *bana* are in demand for weaving ordinary silk sarees, *dhotis*, etc. The raw silk imported from Japan is used for quality weaving. It is also obtained from Assam, Malda (West Bengal) and Banglore. *Tana* silk of these places is superior in evenness, strength and elongation while the *bana* silk suffers from one serious defect of a large number of breakages in unwinding.

Processing of raw silk and weaving

Processing of raw silk is carried out before weaving. It varies according to the kind of fabric to be woven. Processing of raw silk involves the following operations.

1. Winding or reeling consists of transfer of raw silk from hank to bobbin or hand reels.

2. Doubling is done to form one thread out of two or more threads. This is done by indigenous methods.

3. Twisting is still done by indigenous methods. A professional twister works with the help of a boy. Two bamboo poles are erected vertically about 6 feet apart

PLATE I

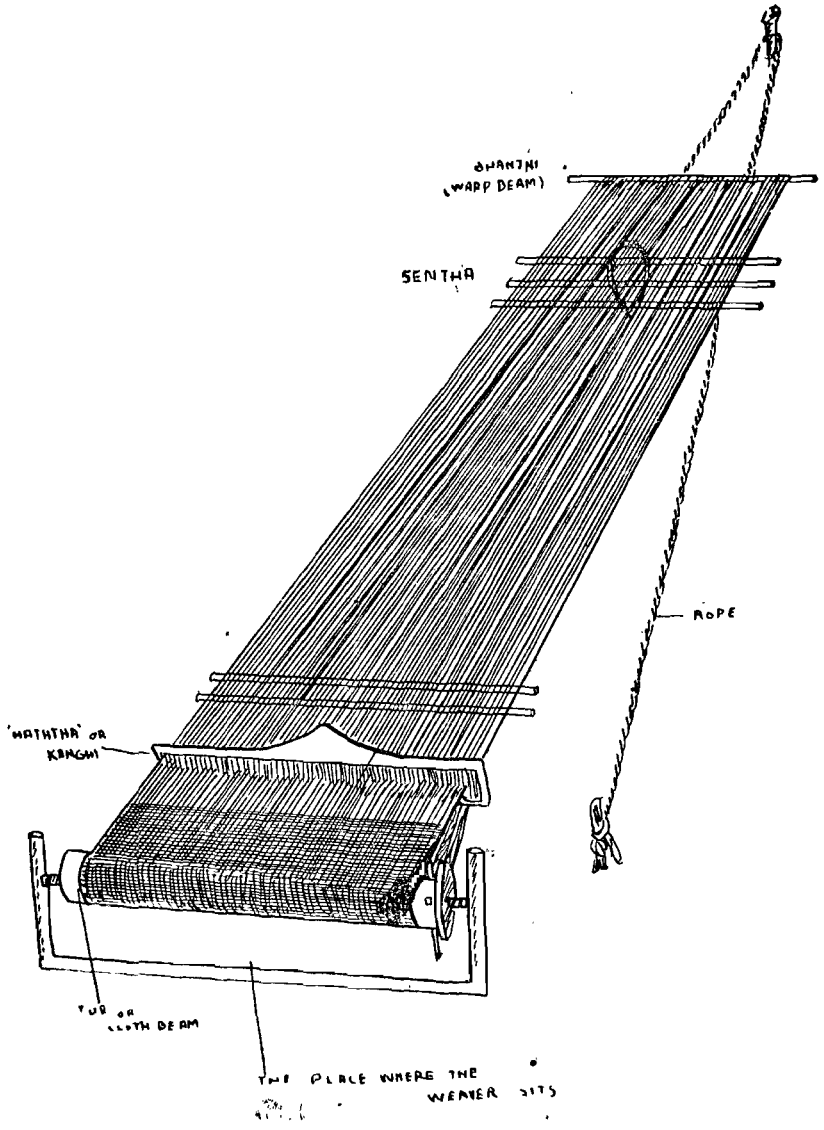

The Pit-loom

and the twister ties two cross slips at a height of about 6 feet from the ground. These supports are erected in an open place in a straight line to a distance calculated according to output. The cross slips are divided into ten compartments by vertical slips tied on them. The double thread to be twisted is passed from the end where the twisters sit to the other end through compartment 1, and brought back through compartment 2. The thread is arranged in the other compartments also in this manner. Spindles are attached to the ten broken free ends to give twist to the thread by turning them with fingers. Twisting is taken to be complete when the ends shorten by about 3 feet. A fresh thread is now tied to the end in compartment 1 and the end in compartment 2 is tied to a *latai* (bamboo reel) and pulled in and wound on it. Twisting is continued in this manner by fitting fresh threads into all compartments. The method is time consuming as no machine is used. The silk weavers of Varanasi follow it in weaving costly sarees.

4. Steaming is done to set the twist by exposing the twisted yarn to steam on the bobbins. It is then made into hanks.

5. Degumming is done to remove the natural gum by boiling the twisted hanks with soap or soap and a little soda. The hanks are dried in the sun and then wound on bobbins.

The warp is prepared according to the length, and width of the fabric to be woven. The practice is to give a twist to the weft threads. The yarn is wound on reeds from which the required number of ends are drawn out and spread. The simple method is to stick posts in the ground in a row to the length of the warp and to apread two threads from end to end, one on each side of the posts and crossing them at the posts. Many weavers follow the improved method and carry the reeds in a frame and lay out many ends at a time. A few have a fixed ereel of bobbins from which the ends are drawn and laid out on a series of pegs on a wall.

Raw silk used as warp does not require sizing but the spun threads, used as warp require before beaming.

The warp threads are then spread out to the width of the weft and wound on the beam with leases to avoid entanglement. Weaving can be done after the warp is set on the loom.

Kinds of Loom in use

Handlooms commonly used in the State are of various types. The one commonly used is the pit-loom. It is simple in construction and consists of :—

(1) a wooden slay with bamboo reed;
(2) two shafts with cotton string healds;
(3) a warp beam which can be let out with the help of a cord;
(4) a take-up beam on supports;
(5) a pair of pedals placed in a pit in the ground where the weaver sits and operates them by his feet.

The pit-loom is usually hung from four upright bamboos and can easily be operated.

In the throw-shuttle loom, the shuttle is thrown with hand from side to side and beating is done by pulling the slay with hand. Flyshuttle loom is an improvement on throw-shuttle loom. It has a slay with shuttle boxes at the ends and the shuttle is pushed from end to end across the slay by pickers attached to a string arrangement pulled with right hand from side to side while beating is done by pulling the slay with the left hand.

In Azamgarh and Varanasi Jacquard frames are frequently attached to the handlooms for weaving designs and hand punching implements are used for punching cards for Jacquard weaving.

Brocade handlooms are very complex in design. Pairs of healds are separately connected to strings and are taken upwards and worked from above. Half of a pattern is worked up by a combination of strings and healds manupulated successively and is completed by reversing the order. Beautiful and elaborate brocades are woven by combining this with double warps and border warps and with any coloured thread or gold or silver threads.

Fabrics

Varanasi (Banaras) is known for its silk fabrics. The chief varities are brocades, sarees, plain silk, scarves and *dupattas*. Brocades are produced at a number of places in the country but Varanasi (Banaras) is their real home. Brocades are articles of elaborate workmanship and aesthetic designs. The ornamentation is exceedingly complex and the weaving very slow with gold and silver threads used in varying proportions. In much of the best weaving better quality of gold and silver threads from Surat are used. In the Banarsi *Kinkhab* a great variety

of designs are worked with gold and silver thread. The famous hunting scene, *Shikargah* design, is the finest of them all. *Kinkhab* pieces are very costly. The brocades are in demand in fashionable society and in foreign markets.

The silk sarees manufactured at Varanasi are famous. The price of a saree increases proportionately to ornamentation. Ornamentation in borders, in the body and at one end (*anchal*) in costly pieces with gold and silver threads in infinite patterns and designs, is carried out to beautify the saree. A saree has frequently a blouse piece, about a yard in length, woven along and sold with it. It is cut out and made into a blouse to match the saree.

Pure silk of Varanasi, woven into checks and stripes, is popular. It washes well, is durable and can be made of various textures. *Gulbadan*, *Mashru* or silk and cotton mixed are also woven there. The weaving of *dupatta* is simple and has a good sale in well-to-do pilgrims visiting Varanasi.

Silk sarees are mainly manufactured at Mubarakpur (Azamgarh). They are produced in great variety of designs with or without gold and silver threads. The value of a saree depends on the quality of materials, intricacy of design and the use of *kalabattu*. Sarees of *nagsi* or *karihal*, *chunri*, *jungla* and *skkat* designs are popular. The silk sarees manufactured at Mubarakpur are in demand among the rich rural folk.

Razai pieces, *chaddars*, *dupattas*, piece goods in stripes are made in Faizabad, Pratapgarh, Jaunpur and Mirzapur. A bad feature of the silk fabrics manufactured in these districts is their poor dyeing. The weavers use aniline dyes which give brilliant effect but do not possess durability.

Estimated production

The Directorate of Industries undertook an industrial survey of the State in 1956. It published Industrial Outlook Reports for each district which contained usefull information on basic and small scale industries. The Table given below is based on these Reports showing the investment, the number of units and workers engaged therein, the value of raw materials and articles produced.

District	Units	No. of workers	Investment (Rs.)	Raw Materials		Article produced	
				weight	Value (Rs.)	weight	Value (Rs.)
Varanasi	5,292	18,594	18,412,000	*Resham* *Jari-ka-tar* 1289-06 lbs	17,102,900	*Main-ly Sarees brocade*, *Resham Than dupatta* etc.	37,341,000
Azam-garh	3,700 (looms)	10,600	1,700,000	*Resham* 46,000 lbs. *Kalabattu* colour	1,903,000 391,000	Sarees 459,000 Yds.	2,821,000
Mirzapur	92	181	4,000	*Resham* 165 lbs.	3,609	Sarees 150	6,000

Silk industry is flourishing in only 3 districts of the State. The number of production units in Varanasi and Mirzapur districts were 5,384. The number of units at Azamgarh was not specified in the Industrial Outlook Report of the district. The number of registered looms there was, however, 3,700. The number of weavers engaged in the craft in these districts was 29,375. The total investment in the units amounted to Rs. 20,116,000. Silk fabrics worth Rs. 40,168,000 were produced in Azamgarh, Varanasi and Mirzapur districts during 1956.

CHIEF CENTRES OF INDUSTRY

The chief centres of silk industry in the State are Mubarakpur in district Azamgarh and Varanasi. The fabrics usually woven at Mubarakpur are *sangi*, *ghalta*, and saree. The manufacture of *sangi* and *ghalta* has declined considerably in recent years. In the manufacture of *sangi*, the warp is usually cotton and the weft is silk or *vice versa*. The *ghalta*, as a rule, is woven in white yarn and then dyed by the dealer. Silk sarees of infinite patterns and designs are manufactured. Each kind of saree has a special name according to its design, colour and type of border. Ornamentation in borders, in the body and at *anchal* with gold and silver threads beautify the saree and consequently the price increases proportionately to ornamentation. They are usually five to six yards in legth and forty four inches in width manufactured in many colours.

The total number of looms and units engaged in pure silk weaving at Mubarakpur in 1960-61 was 4,025 and 1,040 respectively. The approximate number of weavers engaged in the craft was 5,200. A Weavers Cooperative Society was established there in 1947. It helps the

weavers in obtaining raw silk from Japan and runs a Bleaching and Dyeing Centre.

Varanasi is an important centre of the industry. There are about 30,000 handlooms providing employment to about 20,000 skilled weavers and about 75,000 unskilled hands. Brocades, silk sarees, scarves and *dupattas* are mainly manufactured there. The weavers, weaving pure silk yarn also make use of gold and silver threads. Manufacture of brocades and pure silk sarees is expensive. The weavers are, therefore, gradually taking up the use of art silk yarn for the production of cheaper varieties of art silk and mixed yarn sarees.

The silk industry of Varanasi is a good earner of foreign exchange. About 70 to 80 per cent of the silk goods produced there are sold within the country and the balance is exported. The Industries Department has set up a training centre to train skilled silk weavers in weaving fabrics of intricate designs. The trainees are given a monthly stipend of Rs. 40 each during the training period. There are six dye houses operating in the town for dyeing the silk yarn in fast colours and training the weavers in its technique. The 26 Silk Weavers Co-operative Societies produced 182,195 yards of silk cloth valued at Rs. 1,502,863 during April to December 1960. The Uttar Pradesh Industrial Cooperative Association (U.P.I.C.A.) has set up a show-cum-sale depot at Varanasi both for the display and sale of beautiful hand-woven silk fabrics.

SECTION II
SILK INDUSTRY AT MUBARAKPUR

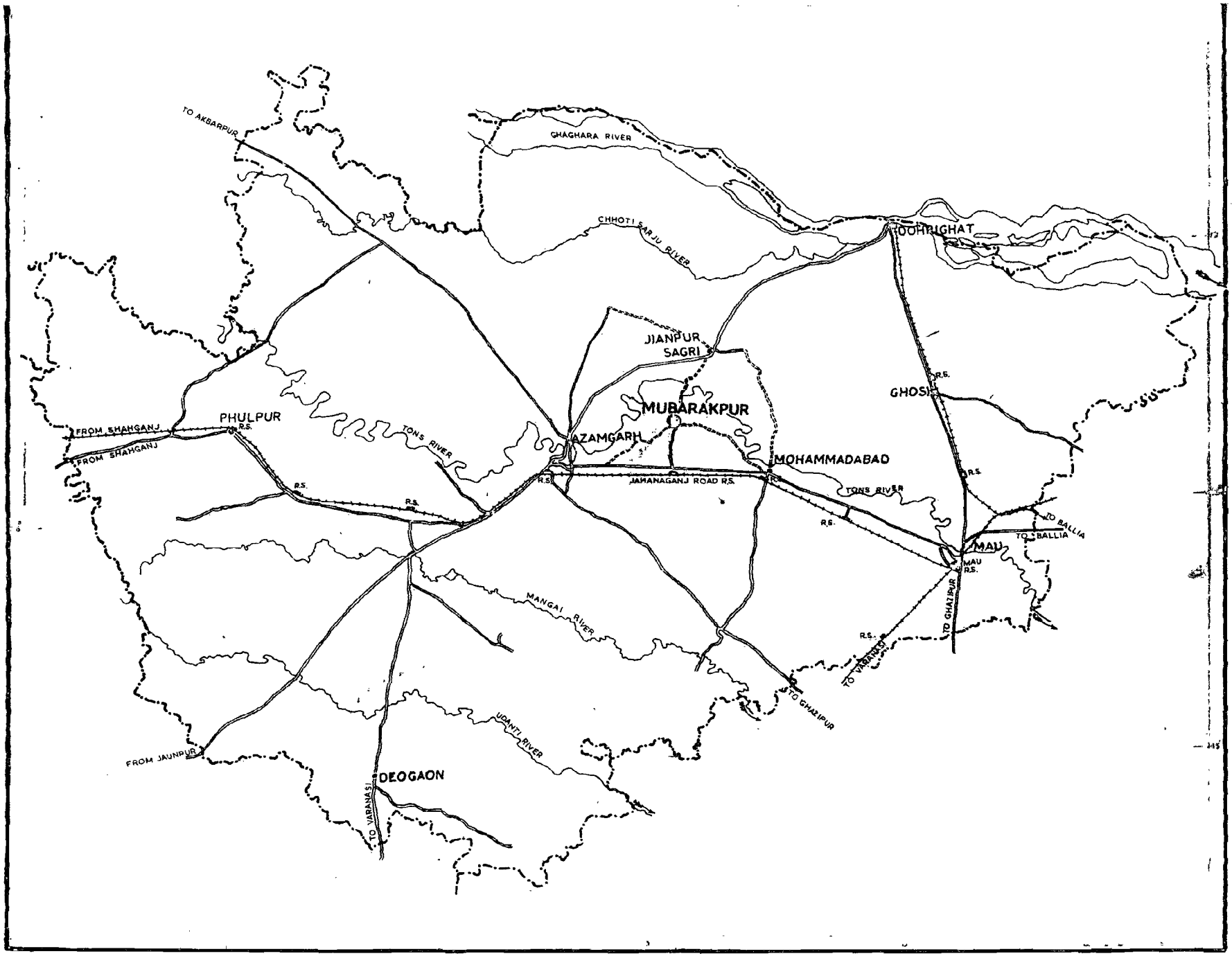

PSUP-AP-10 CENSUS-1969-850. (OFFSET).

NOTIONAL MAP SHOWING LOCATION OF MUBARAKPUR (AZAMGARH).

CHAPTER 1

Introduction

Mubarakpur, a small town about 11 miles in north-east of Azamgarh is an important centre of silk industry in Uttar Pradesh. It is not connected by rail or metalled road. A five mile *kachcha* stretch connects it with Sathion which is on Azamgarh—Mau road. The nearest Railway station is also Sathion on the Azamgarh—Ballia section of North Eastern Railway. Mubarakpur is a Town Area with a population of 16,133 persons. (1961 Census).

An intensive study of silk fabrics manufactured at Mubarakpur was undertaken in 1961-62. The survey was conducted by a trained investigator. In the absence of any authentic and uptodate list of establishments engaged in silk weaving, the investigator was asked to prepare a list of establishments by actually locating them on the spot. He combed the whole town to make the list as complete as possible. The listing operation revealed that the number of units engaged in the manufacture of silk fabrics in the town was 1,040 with 4,025 weaving-looms. In view of the large number of manufacturing units, the survey was conducted on a sample basis. It was decided to adopt simple random sample method based on the selection of random start from the Random Table. Taking the random start as the first sample, every 20th unit was selected as the sample. The effective sample came to 52.

The information was collected through a schedule prescribed by the Registrar General, India and was adopted with some modifications to suit local conditions. Written instructions explaining the concepts and methods used in the survey were prepared and supplied to the investigator for his guidance. Detailed discussions were also held with him so as to ensure uniformity in the information collected through the schedule. All this care was intended to forestall the errors in the filling of schedules to the least extent possible. The Village Craft Schedule has been reproduced as Appendix 1.

The investigator filled the schedules by personally contacting the workers. In the beginning he was viewed with suspicion but with tact and persuasion he won the confidence of the workers and obtained the required information without difficulty. Scrutiny of the filled in schedules was taken up towards the close of the Survey. The gaps and inconsistancies found during scrutiny were made good sometimes by revisiting the establishments. The tabulation of the data was then taken up for analysis and for writing the report. The data collected relate to the year 1961.

The silk industry of Mubarakpur is old and dates back to Moughal times. *Sanghi* was the principal fabric woven at Mubarakpur till the end of the last century. It is woven to produce a wavy *khanjari* pattern, the wavy line being carried on the surface of the fabric to look like embriodery. They may be of pure silk or of silk and cotton mixed with two warp threads of different colours put together. The warp is usually coarse and the weft fine. It is light red with a yellow pattern formed by a series of dots. It was mainly used by rich rural folk. Since its demand was limited, it did not bring adequate profits to the weavers. There was no dearth of skilled weavers in the town and gradually the manufacture of *sanghi* was taken up by silk sarees. Weaving of sarees is in vogue at Mubarakpur for the last forty years.

The truncation of the country in India and Pakistan in 1947 brought difficulties to the weavers of the town. The export of silk sarees to Pakistan fell as they were not preferred there. In the country they were not favoured by the sophisticated urbanites on account of want of originality in designs and colour schemes. The difficulty in obtaining raw silk and the inadequacy of marketing facilities left the weavers in a miserable condition with the result that many turned to cotton weaving which demands smaller investment and guarantees better returns.

The total number of looms engaged in silk and cotton weaving at Mubarakpur is 5,275 of which 1,250 are used for Weaving cotton fabrics. Roughly the present ratio of silk and cotton weaving is 80 and 20 respectively. This is not the optimum ratio because even now the weaving of silk sarees at Mubarakpur is passing through a transitional stage and more looms for silk weaving are being gradullly replaced by looms for cotton weaving.

Silk and cotton weavers of Mubarakpur are mainly drawn from Ansari (*Julaha*) community. The well-to-do among them are engaged in weaving silk sarees as they have resources to cope with difficulties. The poor are turning to cotton weaving. In very rare cases the same household practices both silk and cotton weaving.

Silk industry of Mubarakpur is essentially a cottage industry. Silk is not woven on power looms there. The single weaver is the commonest unit working in the home on the loom. There are small workshops having two or more looms whose owners employ weavers, give them dyed thread and pay on piece-rate basis. It leads to a system of intensive exploitation of the actual workers to the benefit of the employers.

The organised cooperation of the weavers is absent. They distrust each other and the measure of cooperation for mutual advantage is rare. The role of the cooperatives in the industry has been inadequate. There is a feeling among the craftsmen that the industry has not received sufficient encouragement from the Government.

The industry suffers from a number of complexities and problems. The Report examines the drawbacks of the industry, the working conditions of the weavers and the inadequacy of the co-operative and marketing agencies. It makes suggestions for its future development.

CHAPTER II

Workers Engaged in the Craft

The number of skilled workers engaged in 52 sample silk units of Mubarakpur is 260. The bulk of the weavers belong to Ansari (Julaha) community. They are also drawn from Chamar, Ahir, Nonia, Bhar, Darzi, Pathan, Qazi and Dhunia communities. The Table given below gives the number of skilled workers engaged in the craft communitywise with sex breakdown.

Table No.

Caste or Community	Workers			No. of families	No. of families working in cooperation	No. of families working in homes	No. of families working as employee
	Total	Males	Female				
1. Ansari	157	157	..	88	..	51	37
2. Chamar	46	46	..	32	..	..	32
3. Ahir	31	31	..	21	..	..	21
4. Nonia	12	12	..	9	..	..	9
5. Bhar	4	4	..	3	..	..	3
6. Darzi	3	3	..	2	..	..	2
7. Pathan	4	4	..	3	..	..	3
8. Qazi	1	1	..	1	..	1	..
9. Dhunia	2	2	..	2	..	..	2
Total:	260	260	..	161	..	52	109

The skilled workers live in the town and in nearby villages, i. e. Sathion, Chakia, Deoli, Mohabbatpur, Perupur and Ahraula. These villages are situated within a radius of three miles from the town. The village weavers take employment in workshops working for eight hours from 9 A. M. to 5 P. M. with break on Friday—the weekly close day. There is no wholetime female worker in the craft. The owners of workshops employ skilled weavers on piece-rate basis. The owner supervises the work and in spare time works on the loom. His wife and children assist in transferring yarn from the reel to *natawa* and from *natawa* to *paraita,* then to bobbin etc. The wife does not work on the loom. It is estimated that paid workers are engaged in 75 per cent workshops for entire weaving.

The single worker owns one or two looms and the entire weaving is done by him and other family members. The wife and children assist in sorting, reeling and spinning of raw silk. Bleaching and dyeing of yarn are done at the centres. The weaving is done by the weaver.

Most of the skilled weavers of Chamar, Ahir and Nonia communities own land and supplement their income by cultivation. They are engaged in agricultural work at the time of sowing and harvesting and remain absent from the loom for ten to fifteen days during that period. Roughly one loom in the workshop, on an average, remains idle for two to three days in a month.

Workers employed in workshops are of two types, the skilled weavers employed on piece-rate basis according to workload and the unskilled assistants locally called the *doria* engaged by the weavers on daily wage basis. The unskilled assistants are grown up boys below the age of 15 and are generally related to weavers. They help them in pattern making, learning at the same time the various processes of weaving silk fabrics. Thus by prolonged training on the loom they, in course of time, become skilled weavers. Unskilled labourers are not engaged in workshops.

Within the craft itself a certain amount of familywise pecialisation is taking place. The loom used in weaving silk sarees at Mubarakpur is the hand Jacquard loom in which figured designs are woven by a mechanical selection of healds controlled by cards stamped out for any design. With the Jacquard attachment and perforated Jacquard cards any design can be woven by hand. There are a number of establishments in the town, entirely devoted to manufacturing perforated Jacquard cards. Cards are perforated by the workers in these establishments by special machine from a painted design. They are then laced into a chain for weaving a pattern on the saree.

The *Julahas* (Ansari) engaged in silk and cotton weaving are skilled weavers. They display strong clannish feelings and help one another. The nature of education given to them breeds an outlook which does not favour

change of occupation. There is a big institution owned by them in the town which imparts religious education in Arabic to their children. This institution draws its inspiration from Late Maulana Hussain Ahmad Madni, the famous muslim Divine and nationalist leader. The religious education does not qualify them for any other occupation, technical or administrative. They stick to the traditional craft of the family-weaving. Among the *Julahas* (Ansari) very few persons have gone out of the craft but switching over from silk to cotton and *vice versa* is not rare. The education that they get has a great stablising and perhaps stagnating influence on the craft.

Expenditure Pattern

Family budgets of twenty housekols engaged in the manufacture of silk sarees were studied to examine the pattern of expenditure among the weavers. The budgets of three families have been discussed belo w :

M.K. is a skilled silk weaver who lives in his own house at Mubarakpur. His wife is the only other member of the family. He is employed in a workshop and is paid for actual weaving. His wife attends to household duties. There is no other source of income to the family except weaving. The average monthly income of M. K. is Rs. 50. The details of expenditure are given below :

Items	*Expenditure (Rs.)*
1. Cereals and pulses	21·50
2. Milk, *ghee* and oil	5·25
3. Meat, vegetables and spices	6·25
4. Clothing & Footwear	6·00
5. Fuel and light	5·00
6. House repairs	2·00
7. Miscellaneous	3·00
Total:	49·00

It is a surplus budget. The expenditure on food and non-food items is 67·3 per cent and 32·7 per cent respectively. M. K. is making a small saving of Rs.1 a month.

A. H. is a skilled weaver. He works on his own loom in his house. The family consists of his wife and a male child aged three years. A. H. is assisted by his wife in weaving. She does not work on the loom. The average monthly income is Rs. 60. The expenditure on different items is as follows :

Items	*Expenditure (Rs.)*
1. Cereals and pulses	21·50
2. Milk, *ghee* and oil	9·50
3. Meat, vegetables and spices	7·00
4. Clothing & Footwear	8·50
5. Fuel and light	6·00
6. House repairs	3·00
7. Miscellaneous	4·50
Total:	60·00

A. H. is not making any saving but is able to balance the budget. The expenditure on food items is 63·3 per cent. There is no expenditure on the education of his son as he is still very young. The expenditure on milk and fats is reasonable.

H. S. is the proprietor of a workshop having four looms. He is also a skilled weaver. His family consists of his aged parents, his wife and three sons, who all are under the age of 12. He employs three weavers, gives them the dyed thread and pays for weaving on piece-rate basis. He himself works on one loom. Weaving is the only source of income to the family. His parents are old and his wife is engaged in household duties. H. S. does not get any assistance from his family members in weaving. The average monthly income of the family is Rs. 175. The pattern of expenditure is given below :

Items	*Expenditure (Rs.)*
1. Cereals and pulses	50·00
2. Milk, *ghee* and oil	30·00
3. Meat, vegetables and spices	18·00
4. Clothing & Footwear	13·50
5. Fuel and light	9·50
6. House repairs	6·50
7. Education	5·50
8. Miscellaneous	15·00
Total:	148·00

H. S. is saving Rs. 27 per mensem. The expenditure on food is 66·2 of the total expenditure. The expenditure on the education of children is nominal. They are sent to a *maqtab* (religious educational institution) where no tution fee is charged, but the expenditure on books, stationery, etc. is Rs. 5·50 a month.

The standard of living of workers is poor. The main item of expenditure is food followed by clothes, fuel and light. Education of children costs very little. They are not sent to primary schools but are given religious education which is free. The expenditure on food increases steadily on each successive lower level of income. The expenditure on miscellaneous items like medicines, entertainment, etc. is the least.

One of the economic problems facing the weavers is their involvement in debt. The extent of indebtedness among the weavers could not be ascertained as it was not disclosed by them. The debt is incurred to meet the unforeseen expenditure on illness, death, etc.

The weavers borrow from their employers in times of need. They are advanced loan wtih out any, security or interest. In this way the workshop owners maintain contact with the skilled weavers and keep them under obligation. The amount taken on loan is paid back by them in easy instalments without inconvenience.

It was for the benefit of weavers that Azadpura Rani Weavers Cooperative Society was started at Mubarakpur in May 1947. It was established for giving encouragement to silk and cotton weaving. The membership of the Society is open to skilled weavers of the town A weaver who has attained the age of 18 is eligible for its membership provided he is not a lunatic, insolvent or a previous convict. The value of a share is Rs. 25 payable at the time of membership or within a year in four equal instalments. The number of shares is limited to 1,000 and a member cannot purchase more than 40 shares. It has 292 members most of whom are cotton weavers.

The day-to-day affairs of the Society are manged by the President and Secretary elected by the members for two years. The Secretary supervises the work of the Society. It has a sale depot and a Bleaching and Dyeing Centre housed in rented building in the heart of the town. The sale depot is in the charge of a paid manager assisted by a sales attendant. The Society has engaged six skillful dyers at the Bleaching and Dyeing Centre.

The monthly quota of the Society of raw silk imported from Japan is 130 lbs obtained from the Uttar Pradesh Industrial Cooperative Association (U. P. I. C. A.), Varanasi. It is distributed among the members on the basis of looms. Every member gets one pound of imported raw silk for a loom by rotation. The supply is so limited that many turn to importers for its supply on higher rates.

The Bleaching and Dyeing Centre is popular. It provides facilities for bleaching and dyeing of silk and cotton yarn on reasonable rates. The cotton weavers get yarn and other raw materials from the Society. It provides facilities for marketing of finished goods to cotton weavers. The silk weavers have not been relatively benefitted by the Society. The suppy of imported raw silk to them has been inadequate. It has not helped them in marketing of finished silk products.

CHAPTER III

Raw Materials, Tools And Techniques

Raw silk or *kahcha resham* is the main raw material used in the mnufacture of Banarsi silk sarees at Mubarakpur. It is produced on a limited scale in six districts of the State, namely, Dehra Dun, Garhwal, Naini Tal, Saharanpur, Etawah and Gorakhpur. The silk weavers of the town prefer raw silk obtained from West Bengal and Banglore. They get a limited supply of Japanese raw silk which is unbleached and undyed but is strikingly white and reaches the weavers in the form of skeins or hanks. The weavers use it for quality weaving especially for the warp of sarees. The raw silk obtained from Banglore is called *Katan*. It is of deep yellow hue, roughly spun and arrives in hanks of thread. The raw silk is also obtained from Malda (West Bengal) and consists of more than one variety depending on the class of worm from which it springs. The bleaching and dyeing of the yarn is done in the town. It is generally used for the weft of sarees.

The Japanese raw silk is supplied in limited quantity by the Uttar Pradesh Industrial Cooperative Association, Varanasi to the Co-operative Society. Many well-to-do weavers obtain it from Varanasi and Calcutta from importers. The wholesale dealers obtain raw silk from Malda (West Bengal) and Banglore and supply it to the weavers. A list of the wholesale dealers of Mubarakpur is given in Appendix—II.

Reeling And Spinning

The raw silk reaches the weavers in hanks of thread and is not sufficiently strong to be used on the loom. It is subjected by the weaver to ordinary spinning and reeling. He opens the hank of raw thread and places it round the *paraita* which consists of a central stick, to the one end of which are fastened the curved radiating pieces of which the other ends are attached to the circular piece. The central stick is fixed into a hole in a heavy lump of dried mud so that it may rotate easily when rotated by hand. The thread is thus wound round the frame of bamboo sticks of the *paraita*. The thread is then wound on to suitable sized reels which are of two sizes, the larger, used for the warp, are termed *nara* and are about five inches long; while the smaller, known as *nari* are not more than three inches in length and are used to carry the weft yarn. These reels are hollow and are made of bamboo or some other kind of reed. They are put on the free end of the spindle of the *charkha* or the spinning wheel which consists of a wheel supported on either side of the axle by uprights, fixed in flat wooden stand. Six spokes are affixed to each end of the axle. A spoke at one end is connected by string to the two nearest spokes at the other. The result is a series of stretched pieces of string forming the ribs of a cylinder. The spindle is about 12 to 18 inches in length and is supported on two wooden uprights. The pointed end of the spindle projects six to eight inches beyond the support and is connected by an endless string with the wheel. The reed bobbins (*nara*) are put on the free end of the spindle, a little thread is attached to it and by turning the spinning wheel the thread is wound off the *paraita*, the reels being repalced by others as they get filled. The thread is then transferred from the reed bobbins to a machine consisting of a large wheel turned by hand, a bobbin frame and a drum. The bobbin frame has an upright central bar (s) and two upright side pieces. The central bar has on either side, a row of wooden spindles on to which the reed bobbins slide. Each of the side bars has a row of glass bangles fixed directly opposite to an equal number of spindles. The spindles are connected by a cord with the big wheel which imparts a circular motion to them. The whole frame rests in a slanting position during the process of operation, the bottom part being on the ground and the upper part is supported by upright posts fixed in the ground in front of the wheel. A round drum about six feet long and two feet wide is supported between two upright posts facing the bobbin frame with its spindles and bangles. Likewise a rod, with half of the number of bangles fixed upon both sides the bobbin frame is fixed horizontally between the two upright posts halfway down them.

Before the big wheel is set in motion, the bobbins containing thread of similar quality are placed in each set of two spindles. When the big wheel starts moving, the cords which pass round it also set each set of two spindles in motion and each pair of revolving bobbins send their threads separately through two bangles upon the frame till they reach the horizontal rod where they are united

PLATE II

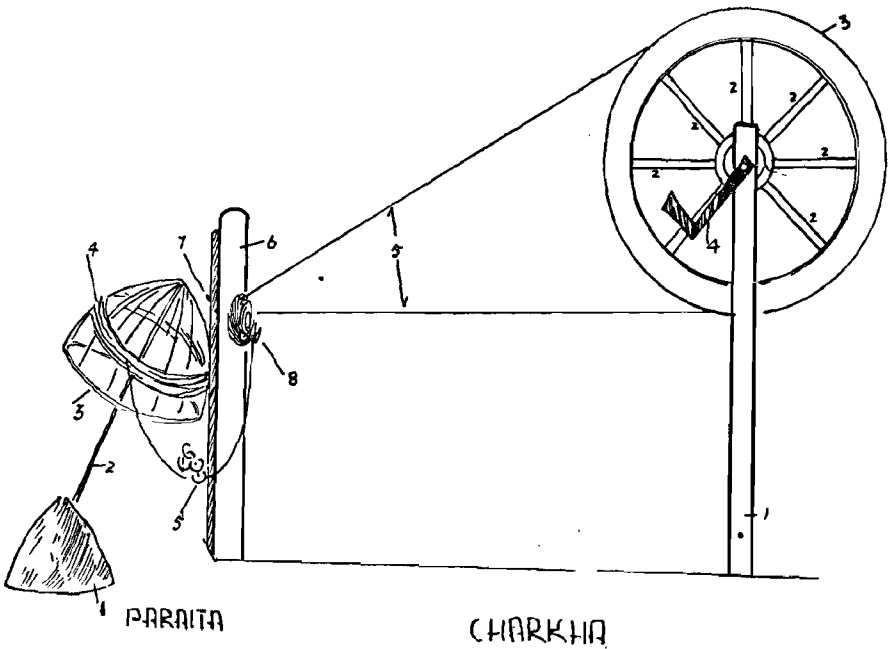

PARAITA

1. Lump of clay
2. Vertical Bar
3. Cane
4. Yarn on cane
5. Brass Rings

CHARKHA

1. Wooden up right
2. Spokes
3. Wheel tier
4. Handle
5. String (*Mal*)
6. Spindle supports
7. Spindle
8. Yarn on Spindle

PLATE III

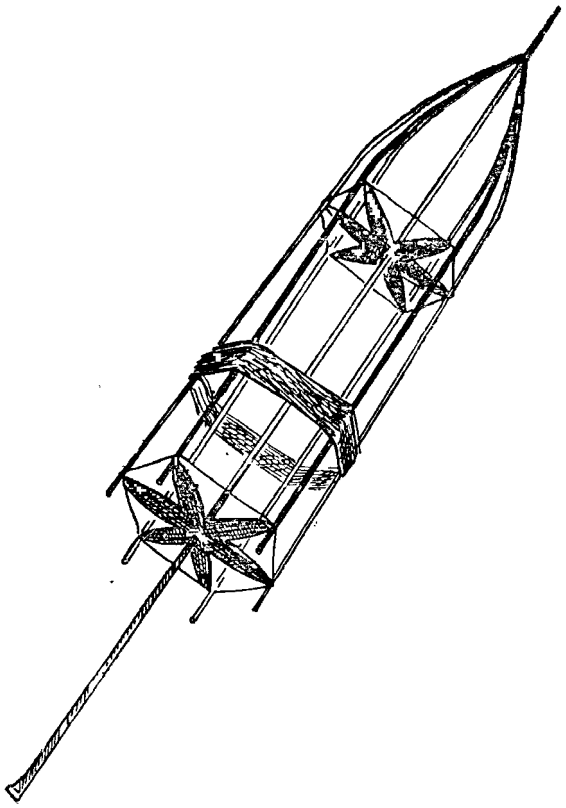

Paraita

PLATE IV

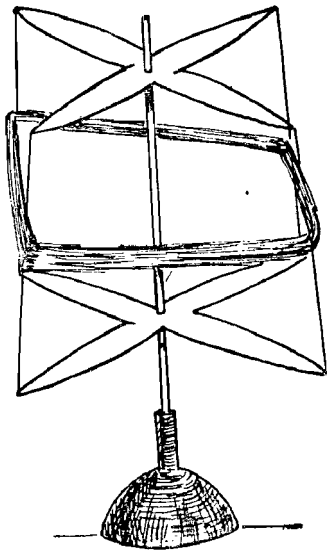

NATAWA

and pass through one bangle in the series upon the rod. The bangle upon the rod is so placed that a twist is given to the threads as they pass through it. It causes them to unite closely into one double thread strong enough to bear the tension of the loom. The double threads, so obtained, are slowly rolled round the drum.

Bleaching

The silk, now reeled and spun, is ready for bleaching. In the crude state the silk hank has an element of gum like substance, yellowish in colour and other impurities which are removed by boiling in a solution of impure carbonate of soda and slaked lime. For bleaching 1,000 grams of silk thread, a solution of 200 grams of carbonate of soda and slaked lime and 30 lbs of water is prepared. It is boiled in a large vat. Before dipping the thread in the solution, it is immersed in cold water. The hank is suspended on two wooden sticks the ends of which are held by two persons standing on either side of the vat who immerse it into the bleaching mixture four times thereby removing all dirt and gum. The hank is then cooled by immersing in cold water and is dried. Occasionally the impurities of the silk threads are also removed by a simple washing with country soap. After washing, the white silk is subjected to fumigation. Burning sulphur is kept in a vessel over which a large bamboo basket is turned upside down. The silk covered with cloth is spread out upon the unturned bottom of the basket and its other sides are also covered likewise thus preventing the escape of fumes. The silk remains in this condition for about fifteen minutes and is denuded of all natural colouring matter. As a result of this process the silk turns bright and soft and pure white silk in its undyed state is available for use. The process of bleaching is locally called *'nikhar'* or *'kharana'*.

Dyeing

The hank is now ready for dyeing. The indigenous dye of the country used by the forefathers of the weavers has been gradually replaced by the aniline dye which is cheap and easily available. It does not possess durability although the effect is brilliant. The method of dyeing is simple. The desired colour is prepared by dilution in proportionate quantity of water in a vat and is boiled. The hank is dipped into the boiling solution by the workman and is withdrawn. It is so hanged through a rod that its lower portion remains in the colouring liquid and by the gradual rotation of the rod the entire hank, in the course of time, is passed through it. The hank is squeezed and is dried in a place which is not exposed to sun. Sarees of *nagsi chunari* and *skat* designs in red, *gulabi* (pink) and *pyazi* (light pink) colours are popular. These colours are cheaply produced by analine dyes. The use of *narangi* (orange) and *kesaria* (suffron) colours is not uncommon. The usual green, *kahi* (dark green), *sabz kahi* (light green), *mashi* (grass green) and *mungia* (light yellowish green) colours are used in the manufacture of sarees of *skat* and *karihal* (with red border) designs. Generally silk threads are dyed with indigo and are immersed in a solution of turmeric to produce green colour. Aniline dye is also used in direct conjunction with kapila powder—the reddish yellow powder which covers the fruit of *kamila* (Rottleria tinetoria) tree—to produce green colour. *Uda* (purple blue), *asmani* (sky blue) and *baigni* (violet) are different shades of the parent blue colour and are common. Of the yellow, *zard* (yellow), *motia* (yellowish red), *nibui* (lemon yellow), *gandhaki* (sulphur yellow), *kapasi* (pale yellow) shades are popular. To obtain the yellow colour a solution is usually made of impure carbonate of soda, kapila powder and aniline yellow.

The bleaching and dyeing of silk threads is done at the three centres in the town. Sarvshri Khalil Ahmad and Mohamad Yusuf who are well-to-do weavers run two centres while the third is managed by the Co-operative Society. The bleaching and dyeing charges vary between Rs. 5 to Rs. 8 per 1,000 grams of silk threads depending on the quality of dye and material for bleaching. The bleaching and dyeing charges for a saree, on an average, are Rs. 2.

The weaver gets from the centre the silk tied into rough skein, considerably reduced in weight. The silk yarn is not sized at Mubarakpur. The thread (katan or warp thread) is wound on the *paraita*. The weaver places one of the hollow reed bobbins (*nara*) upon the projecting part of the spindle of the spinning wheel and ties to it the end of the silk thread which is upon the *paraita*. Then, holding the *paraita* in one hand, he turns the wheel with the other. The silk thread, which has already been connected with the reed bobbin slowly winds off the *paraita* on to the bobbin. The long iron needle on which the *nara* rests loaded with thread is called *salai*. Sometimes the *salai* has a wooden handle made of reed grass.

Arranging of the warp Threads

With these *salais* the thread is delivered to a *tanihara* or arranger of warp threads. He takes two of the *salais* and goes to an open space where a frame work has been put up for the arrangement of warp threads. Four pegs (A,

B, C and D) are so planted in the ground that the width B to C may allow the *tanihara* to move about freely in the space within the four pegs. The distances A B and C D are so measured out that the total of A B, B C and C D may be equal to the required length of the pieces to be woven at one setting of the loom. *Senthas* (reeds) 3½ feet long and ½ inch in width are then planted, singly or in pairs, about 8 feet apart from peg to peg, except from A to D. The *tanihara* then sets himself to work with the thread on the two *salais*. The threads pass out from the two *salais* through the two loops and are laid on the alternate sides of the *senthas* and pegs. Both *salais* are used simultaneously by the *tanihara* who holds one in each hand. The threads of both *salais* are first knotted together and the *tanihara* begins by putting the united thread round the peg at A. He then walks through the alley in the direction of B laying the threads of the two *salais* alternately on both sides of the *senthas* and pegs. The diagram given below shows how the two threads (A and B) are alternately laid from the two *salais* from A to B, B to C and C to D.

The threads are drawn out without any effort. The *tanihara* moves on with the *salais* and as he approaches each peg or *sentha* he passes one thread by the right of it and the other by the left, in such a manner that the two threads may intersect between two *senthas* or a peg and a *sentha*. He proceeds in this manner upto D, no intersections being made at or between B and C, the thread simply passes round them. The same process is repeated when the *tanihara* comes back from D to A laying two more threads above the first two. He thus goes up and down until he has obtained a sufficient number of threads side by side arranged in this manner. The set of intersections between a pair of *senthas* is called *santhi*. The *senthas* are removed when the warping is completed and slender bamboo rods are inserted to keep the two sets of thread from the two *salais* separate. This will keep the croissage (intersection) intact. The warp with slender bamboo rods inserted in them is rolled up and is brought to the loom for the next process.

Preparation of weft Threads

After bleaching and dyeing, the threads used for weft undergo a different treatment. From *paraita* they are taken off and put on an instrument called *natai* of which the rotating position is sometimes horizontal. From *natai*, the thread is transferred to *nari* (reed bobbin about three inches in length) by means of the *charkha*. The thread is ultimately transferred to the bobbin of the little boat like shuttle which works the weft *bana*.

The next process consists of heddle filing, joining and arranging. The warp threads are placed in position upon the loom and are drawn one by one through the eyelets of the heddles and the teeth of the comb. One end of the warp is fastened round the cloth beam and it now remains to fasten the other end to the warp beam. This end of the warp is left uncut and sections of it are taken and fastened to it. The rest is rolled up in a bundle and is suspended over the beam which slowly moves towards the heddles and comb as the process of weaving goes on. When it has drawn near, the first process is again repeated by loosening a further section of warp thread from the bundle which is attached in sections to the beam. It is then moved back to its original position about six feet from the weaver's end of the loom. After the whole warp has been stretched on the loom, the comb and heddles are moved into their respective positions taking care that the threads run through them properly.

The process of weaving has now been reached. The loom used for weaving sarees at Mubarakpur is the hand Jacquard loom in which figured designs are woven by a mechanical selection of healds controlled by cards stamped out for each design. Given the Jacquard attachment and the cards practically any design can be woven by hand. Before entering into details a brief description of the Jacquard machine appears necessary.

The Jacquard machine has taken the place of loops and pulleys at Mubarakpur. All the looms in the town are operated by Jacquard. The *Naksha* or *Jali* system of weaving is not in vogue there.

In a Jacquard machine, the warp threads are raised by rows of upright wires called hooks. These are bent at both extremities and are normally supported upon a bot-ton board which is perforated to permit the neck cards from the harness beneath to be attached to the hooks. Each of a series of horizontal needles is provided with a loop and a crank. The straight ends of the needles protrude about one quarter of an inch through a perforated needle board but the looped ends rest upon bars. A wire passed through all the loops of the needles which form one vertical line limits the extent of their lateral movement and small helical springs infringe upon the loops of the needles with sufficient force to press them and their hooks forward. A frame called a griff rises and falls vertically

PLATE V

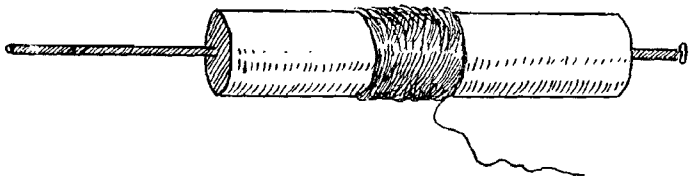

Salai for the warp

PLATE VI

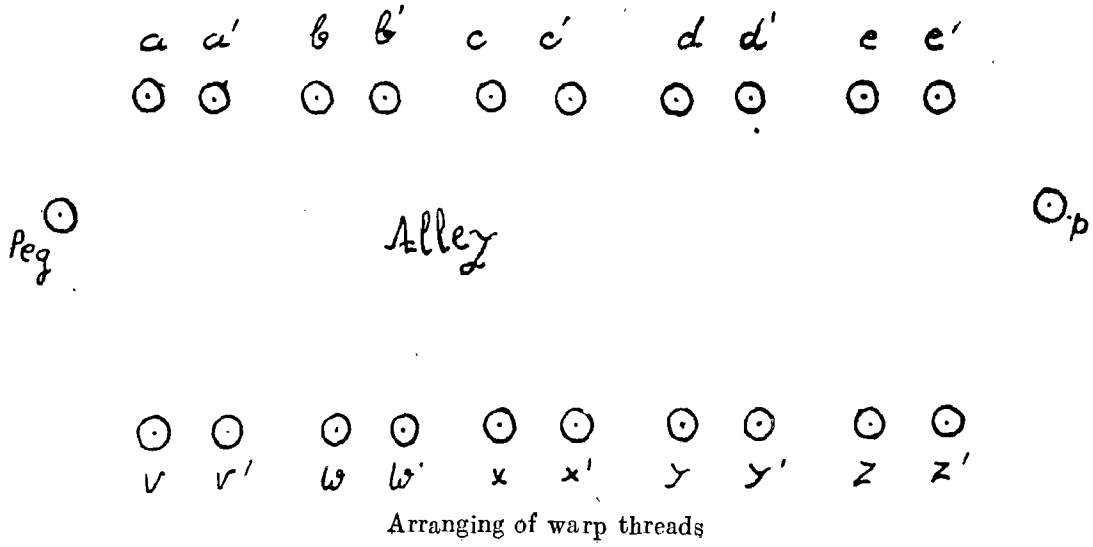

Arranging of warp threads

PLATE VII

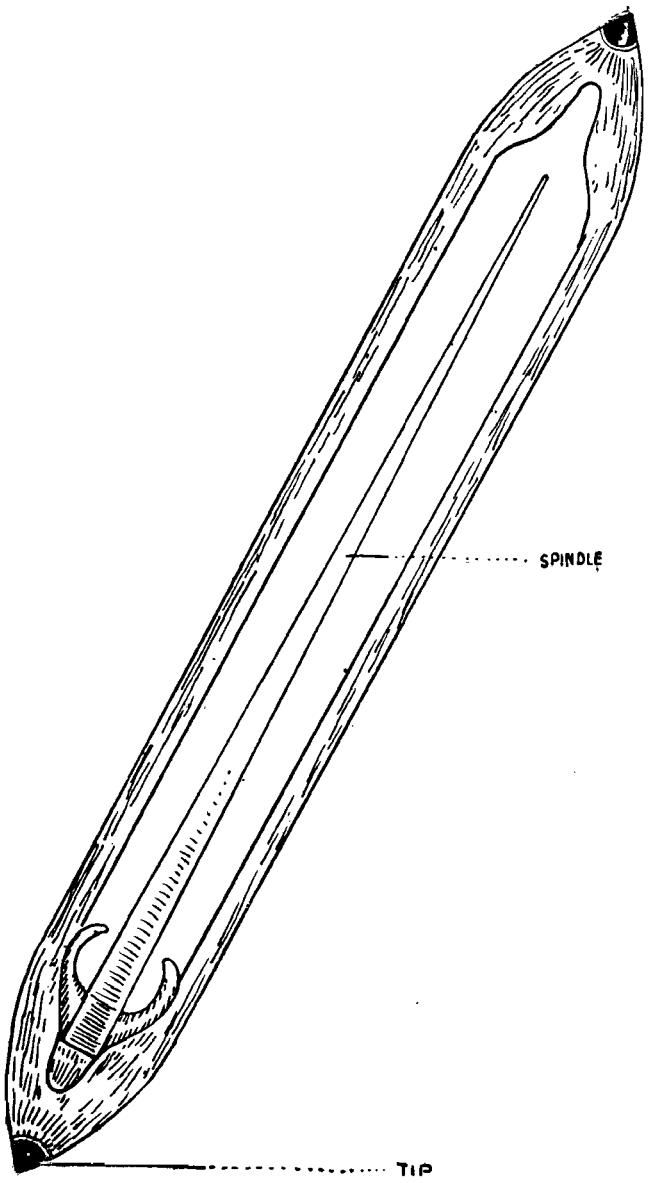

Shuttle

PLATE VIII

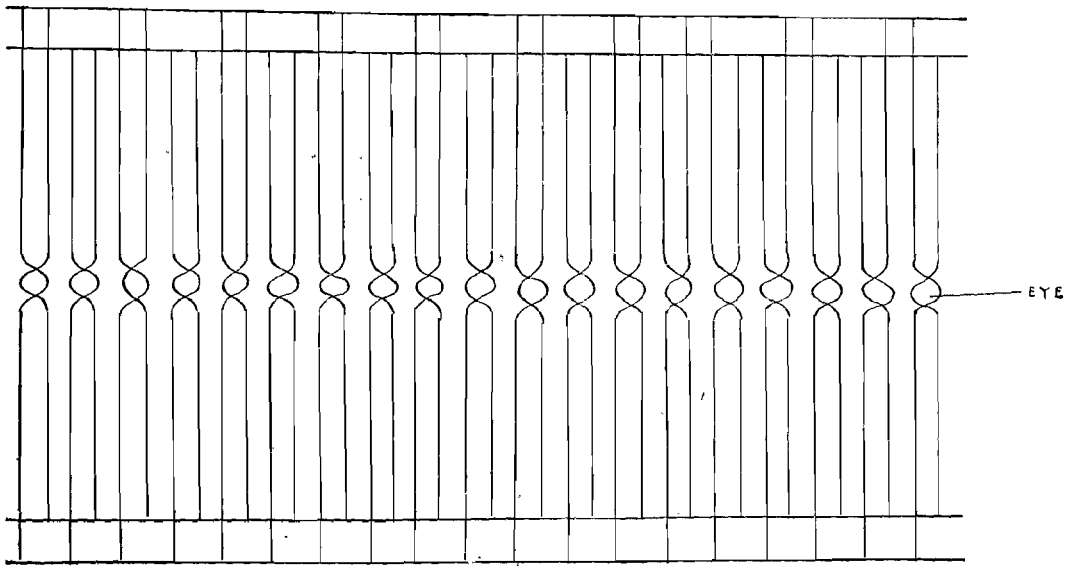

HEALD OR BAI

PLATE X

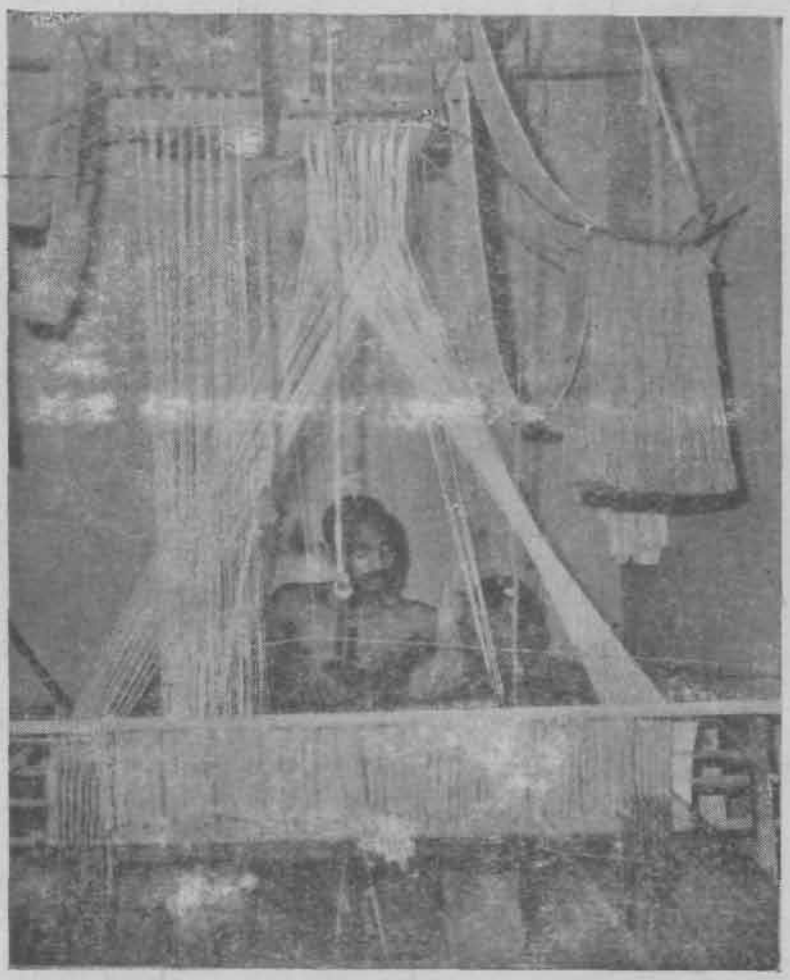

Weaver at the loom

PLATE XI

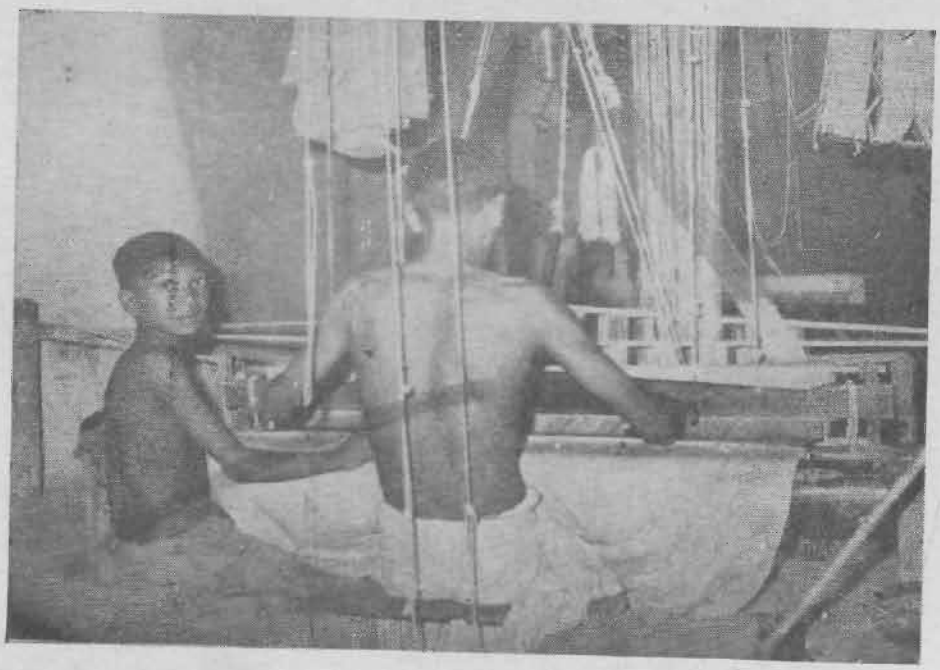

Weaving in progress

PLATE XI

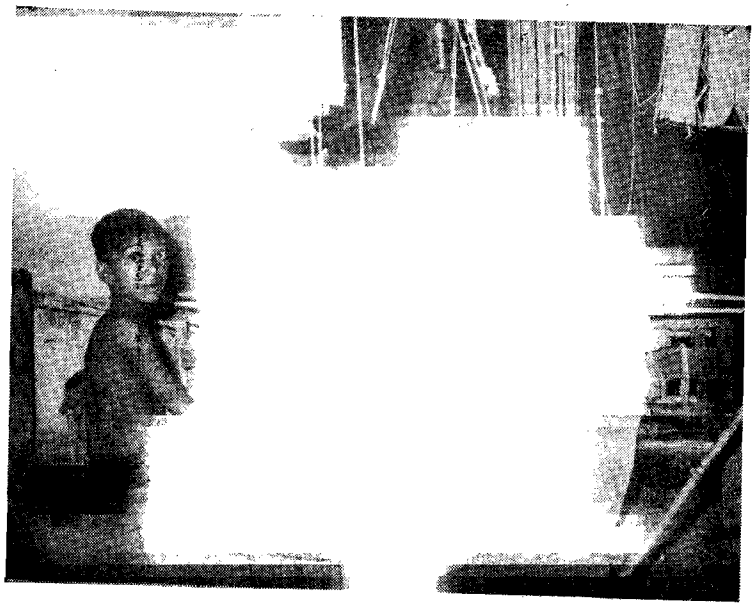

Weaving in progress

by a traddle which the weaver actuates with the foot. This frame contains a blade for each line of hooks. When the blades are in their lowest position, the hooks are free and vertical with their heads immediately over them. Hence an upward movement given to the griff would lift all the hooks and thereby all the warp threads. Only certain hooks, however, must be lifted with the griff and the selection is by a quadrangular block of wood, called a cylinder and cards which are placed upon it. Each face of the cylinder has a perforation opposite each needle so that if the cylinder is pressed close to the needle board, the needle points will enter the holes in the cylinder and remain undisturbed. But if a card which is not perforated in every place is interposed between the cylinder and the needles, the unpunctured parts of the card close-up some of the holes in the cylinder and prevent corresponding needles from entering them. Each needle so arrested is thrust back by the advancing card; its spiral spring is contracted and its hook is lifted. If at this moment, the griff ascends, its blade will engage the heads of all vertical hooks and lift them but those that are tilted will remain unlifted. As soon as the pressing force of a card is removed from the needles, the springs restore both the needles and hooks to their normal positions. Cards are perforated by a special machinery from a painted design after which they are laced into a chain and passed over conical pegs upon the cylinder; the number required to weave any pattern equals the number of weft threads in that pattern. As the griff rises with vertical hooks, a shed is formed and a thread of weft is passed across the warp. The griff then descends and the operation is repeated but with a new combination of lifted threads for each card. A Jacquard may contain from 100 to 1,200 hooks and needles.

Weaving

The loom is arranged in the weaving room or *karkhana* which is generally small and is not well lighted or ventilated. The loom used by the weavers of Mubarakpur is a throw-shuttle loom. The simplest arrangement of the loom consists of a warp-beam and is about 4 feet long and 2 to 4 inches round. The warp is fastened on this beam in sections and to support both warp and beam, a strong card is fastened to the middle of the beam and then passed round a fixed pulley and carried all the way back to a peg on the right hand of the weaver. The weaver himself sits in a pit which is about 30 inches long and deep. At the weaver's end is the second beam called the cloth-beam or *tur* or *lapetan*. The ends of the cloth beam rest in sockets which enable the weaver to slowly turn the beam and roll the web round it. It contains holes in different directions through which the pegs are let in to fix the beam and keep it in position. Behind it is the batten or frame of the loom, the upper and lower parts of which are each composed of two pieces of wood closely fitted together. Between the warp beam and cloth beam are a set of *senthas* (reeds) which keep the warp threads intact. Nearer the weaver are a set of *bai* or *baisers* (heald). *Bai* is an upright rectangular frame with the threads running up and down parallel to each other. Each one consists an upper and a lower set of thread loops which intertwine between the upper and the lower sticks of the frame. Ordinarily there are two *baisers* in a loom. Every alternate warp thread is passed through the middle hole formed by the intertwining of a given set of upper and lower loops in one *baiser* so that where there are two *baisers* the number of loops in one set (upper or lower) is exactly half the total number of threads to the warp. Where the number of *baisers* is more than two, the arrangement of raising and distribution of warp is complicated, the movement and operations thereof being not exactly alternate.

The treadles or footboards (*paunsars*) are in the lower parts of the loom situated in the pit. Treadles are a device through which the weaver gives motion to the loom by his feet. By working the treadles the weaver raises or lowers the threads of the warp. The *baisers*, the treadles, the Jacquard machine and the threads of the warp are all interconnected and each alternate motion of the foot for raising and depressing the warp threads forms a shed through which the shuttle is passed by the weaver with the hand from side to side. At the same time the bobbins (*nari*) on which the *kalabattu* is wound is passed by the *doria* (paid apprentice) through the shed formed for the pattern weaving of the saree. *Dharki* or shuttle which has a smooth glazed surface enables it to slide rapidly during the process of weaving. The revolution of the bobbin, fixed within the shuttle, facilitates unwinding of the thread. This thread which comes out through a small hole in a corner of the shuttle is called weft. As the weft thread passes from side to side, now over one set of warp threads and under another and then under the first set of threads and over to the other set, the network which forms the fabric is produced. By means of a *haththa* (a comb), the weaver presses the weft threads close to each other as the fabric proceeds and from

PLATE XII

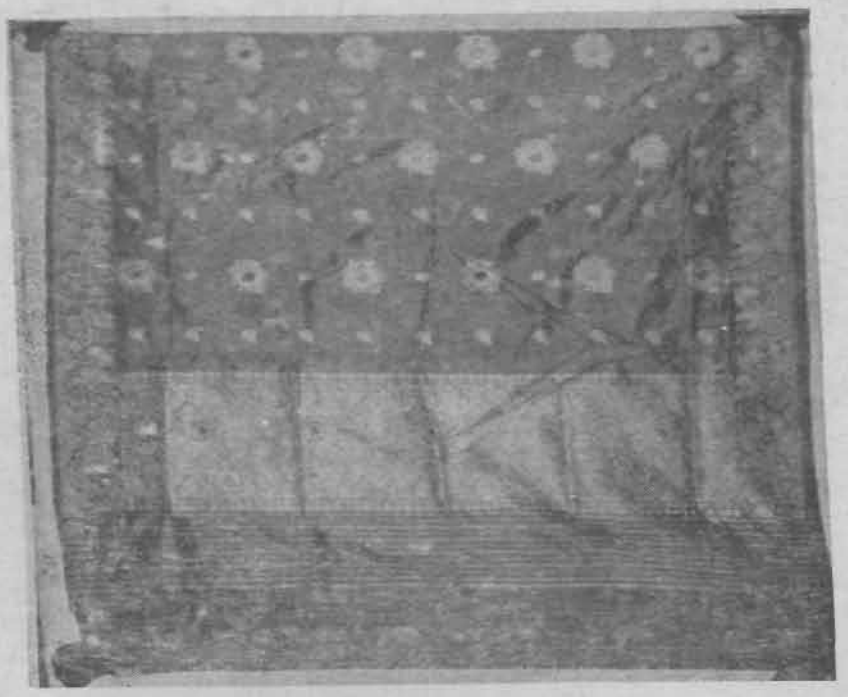

Naqsi or *Karihal*

PLATE XIII

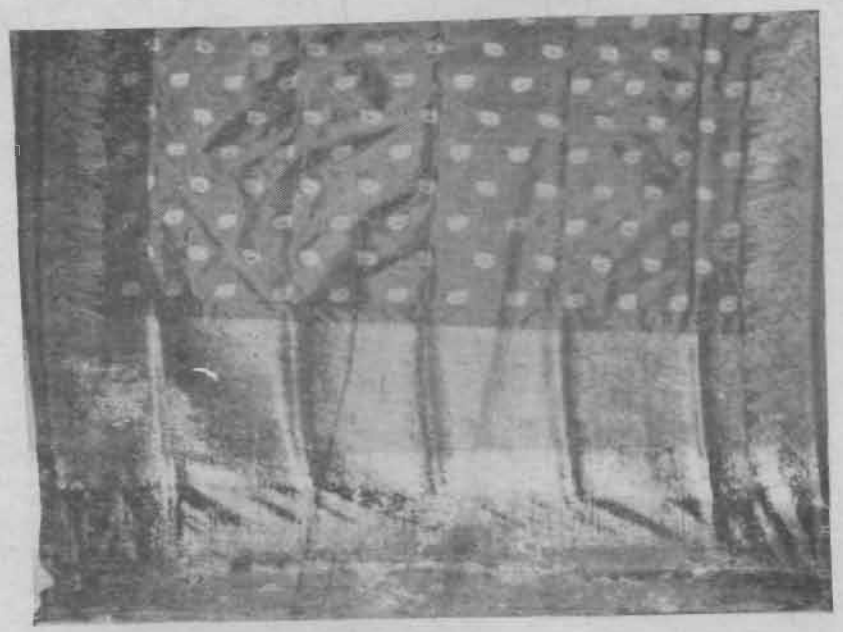

Chunari

PLATE XIV

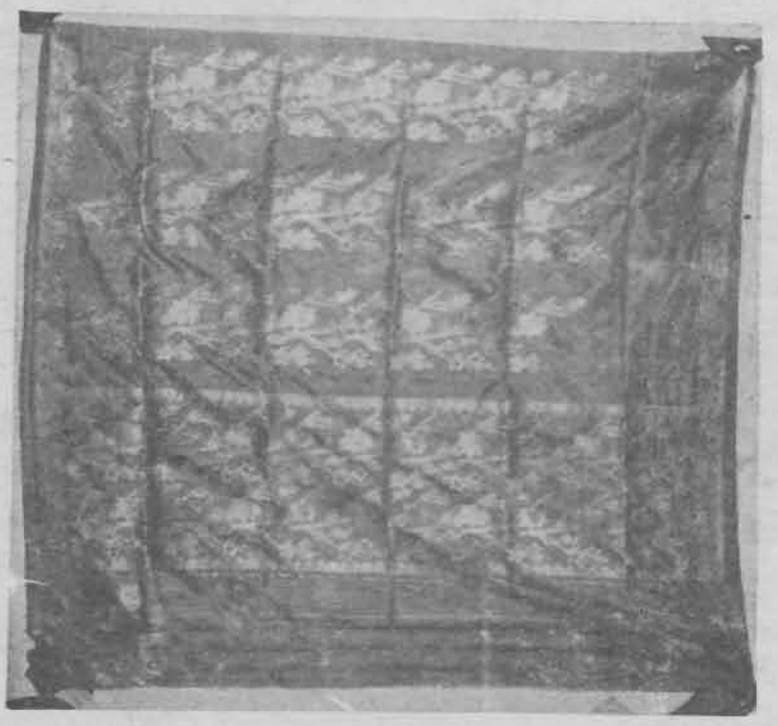

Phulwar or *Jungla*

PLATE XV

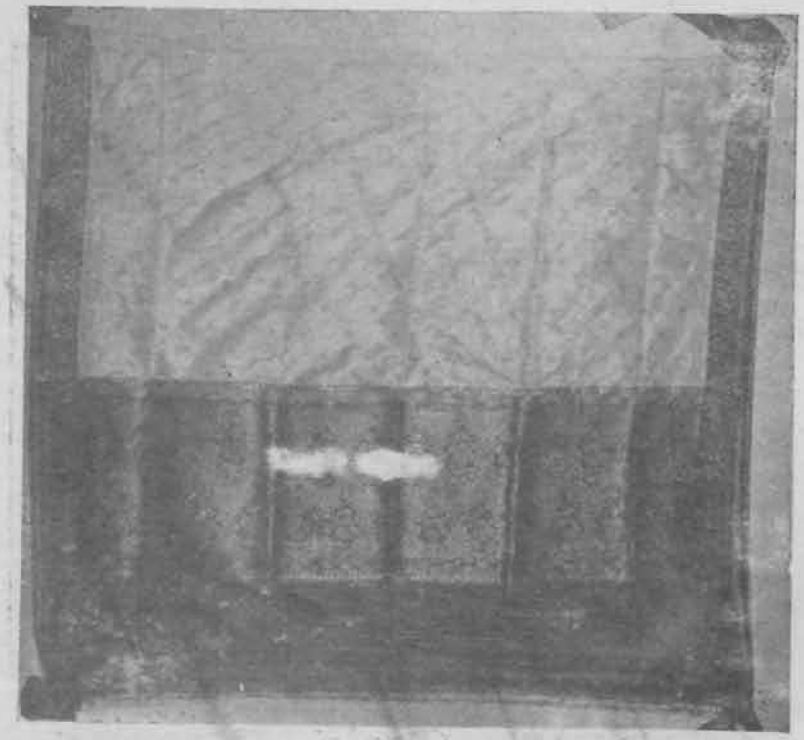

Skat

PLATE XIV



Phulwar or *Jungla*

PLATE XV



Skat

CHAPTER IV

DESIGNS

Silk sarees of the following designs are mainly manufactured at Mubarakpur:

1. *Nagsi* or *Karihal*
2. *Chunari*
3. *Phulwar* or *Jungla*
4. *Skat*

The field design of *nagsi* or *karihal* saree generally consists of *bûtis* arranged on the ground. The *butis* are woven with *kela* or *kalabattu* and are circular in shape resembling a star. The field may be dark blue, purple, pink, red or shot with dark red and blue. The end-piece called *anchal* is usually three to four inches broad and is decorated with *butis* flowers, etc.

The entire ground of *chunari* saree is covered with *butis* but the *anchal* (end piece) is very ornamental depicting flowering shrubs, flowers, *butis* etc.—all elaborately detailed. These sarees are generally produced in a wide variety of colours. *Surkh* (red), *gulabi* (pink) and *pyazi* (light pink) colours generally predominate in *chunri* sarees.

The saree of *skat* design is conspicuous by a narrow border on one side and broad (8″ to 10″) on the other bound by two parallel stripes. The field of the saree has sprays of *butis* or small flowers, either scattered all over or arranged in diagonal lines. They are produced in many colours with red, pink, blue and green predominating.

Among the other designs are the *phulwar* or *jvngla* in which a floral pattern runs all over the piece containing leaves and realistically depicted flowers. In these sarees every inch is covered with floral pattern with a beautiful wend of colours.

Gold and silver threads, known as *kalabattu* are used in embroidering sarees of different designs. *Kalabattu* is a semi metallic product of silk thread sheathing gold or silver threads round them and thereby shaping the thread akin to the metallic wire of the precious material used. The process of its manufacture is simple. A bar of silver is coated heavily with gold leaf which is fixed on by hammering. It is then drawn through holes in steel plates, at first by a winch; each hole is a trace smaller than the last and at each drawing the bar elongates. The gold always overlays the silver, a bar an inch long becomes hundreds of feet of fine thread wound on spools and when it is fine enough is passed between steel rollers and becomes flat. It is then wound round a thick orange thread of silk and is drawn through the axis of a steel flayer and the flat thread is laid on it so as to cover it. In much of the best weaving, *kalabattu* is used. It is generally obtained from Varanasi. Silver and gold threads of extreme fineness are obtained from Surat on order for weaving sarees in silk and gold threads in beautiful colours and floral designs.

The hand Jacquard loom is used at Mubarakpur. In this loom figured designs are woven by a machanical selection of healds controlled by cards perforated by special machine from a painted design. With the Jacquard attachment and the cards, practically any design can be woven by hand. The weaver operates the loom with the treadles and with each alternate motion of his foot a shed is formed. The *doria* (paid apprentice) who sits by the side of the weaver quickly passes the bobbins (*nari*) on which *kalabattu* is wound through the shed. This process is repeated in quick succession working out a beautiful and elaborate design on the saree.

The triumph of a craftman lies in simplicity, treatment of decorative details and in the perfect harmony and distribution of colours. In the colour designs there should be no harshness or abruptness, the colours flowing one into the other. Bulk of the sarees manufactured at Mubarakpur lack in subtle colour harmonies and in originality in designs. This is due to a variety of reasons. The master designers work in isolation and are not helped to new ideas. They are content with traditional designs without any keenness for new patterns or new colour schemes. Whatever designs they get are from the wholesale dealers who visit the town occasionally or from the workers.

The value of innovations in designs cannot be over emphasised. It involves the intelligent cooperation of dealers and shops. There should be trained designers in the craft with keenness to look out for new designs and for new colour schemes to suit the modern urban taste. The enterprising and intelligent dealers should get in touch with the tourists visiting Varanasi for new ideas in designs and suggest them to the weavers. Improvement in designs and colour schemes will help the craft to flourish.

CHAPTER V

Cost of Production

An attempt has been made to calculate the cost of production of sarees of *nagsi*, *skat* and *jungla* designs. The cost of their manufacture varies according to designs and materials used. It includes the amount spent on raw materials, bleaching and dyeing of yarn, payment made to *tanihara*, designer, Jacquard card-makers and weavers.

The estimated cost of manufacture of a saree of *nagsi* design (6 yards in length and 44 inches in width) is given below :

Items	*Quantity*	*Amount*
1. Raw Silk	150 grams	Rs. 15·00
2. *Katan*	100 grams	Rs. 11·00
3. *Kalabattu*	70 grams	Rs. 10·50
4. *Kela*	25 grams	Rs. 0·50
5. Bleaching and Dyeing	..	Rs. 2·50
6. *Tanihara*	..	Rs. 0·62
7. Skilled Weaver	..	Rs. 12·00
8. Designer and Jacquard card-maker		Rs. 2·50
	Total	Rs. 54·62

The saree is sold to the wholesale dealer for Rs. 65 through the broker; the brokerage being Rs. 4·6. nP. The net profit to the weaver on the saree is Rs·6. 32 nP. The wholesale dealer gets the finishing done before it is sold to retailers. The average cost of finishing is Rs. 2 per saree.

The average cost of production of a saree of *Skat* design (6 yards long and 44 inches in width) is shown below :

Items	*Quantity*	*Amount*
1. Raw Silk	150 grams	Rs. 15·00
2. *Katan*	100 grams	Rs. 11·00
3. *Kalabattu*	160 grams	Rs. 36·00
4. *Kela*	50 grams	Rs. 1·00
5. Bleaching and Dyeing	..	Rs. 2·50
6. *Tanihara*	..	Rs. 0·75
7. Skilled weaver	..	Rs. 20·00
8. Designer and Jacquard card-maker	..	Rs. 2·50
	Total	Rs. 88·75

The saree is sold through the broker for Rs. 110; the brokerage being Rs. 6·87 nP. The margin of profit is adequate. The finishing and calendering is got done by the wholesale dealer.

The average cost of production of a saree of *Jungla* design (6 yards long and 44 inches in width) is as follows :

Items	*Quantity*	*Amount*
1. Raw silk	150 grams	Rs. 15·00
2. *Katan*	100 grams	Rs. 11·00
3. *Kalabattu*	200 grams	Rs. 35·00
4. *Kela*	50 grams	Rs. 1·00
5. Bleaching and Dyeing	..	Rs. 2·50
6. *Tanihara*	..	Rs. 0·75
7. Skilled weaver	..	Rs. 20·00
8. Designer and Jacquard card-maker	..	Rs. 2·50
	Total	Rs. 87·75

The saree is sold for Rs. 100. The broker gets brokerage at the rate of 6 nP. per rupee on the sale price of the saree. The percentage of profit to the weaver is $6\frac{1}{4}$ per cent.

The average cost of production of silk sarees manufactured at Mubarakpur is high on account of raw materials obtained from the local dealers on high rates. The multi-purpose co-operative societies can be of effective help in their supply on reasonable rates. It will reduce their cost of production.

CHAPTER VI

MARKETING

Weaving in Mubarakpur is run on two systems, each with its own characteristics :—

1. The single weaver,
2. The owners of the workshops who employ skilled weavers.

The single weaver is the commonest unit. He works in his house on the loom. He is handicapped for want of capital and raw materials. The middleman who is also the dealer supplies him yarn and purchases the finished products on fixed rates. The weaver is almost entirely within his power and weaves sarees and other silk fabrics according to order. The dealer stocks and sells them at prevailing market rates sharing the profits. The artisans do not get a commensurate share in profits.

The institution of intermediary brokers is quite powerful and dominates a major portion of the trade. The owners of workshops get the silk sarees manufactured through the skilled weavers whom they pay on piece-rate basis. They do not work on their own account. The goods are lifted by the brokers; the brokerage being 6 paise in a rupee. The workshop owners are at the mercy of these intermediaries and their malpractices They do not recieve immediate payment but are given post-dated cheques cashable after three or four months. The capital of the manufacturers is thus blocked causing monetary inconvenience.

During my visit to Mubarakpur, I was shown two post-dated bearer cheques by Sarvshri Mohammad Zaheer and Abdul Rehman, owners of the workshops. Shri Mohammad Zaheer received from one broker a bearer cheque for Rs.246 which was dated November 27, 1962 for three sarees delivered to him in September 1962. Abdul Rehman was also given a cheque for Rs. 565·75 nP. dated March 20, 1963 for six silk sarees delivered to the broker on January 27, 1963. In fact these bearer cheques keep changing hands. They originate from wholesale dealers and reach the manufacturers through the brokers. Sometimes the manufacturer is put to a further loss due to the disposal of the stock on a price which is lower than the cost price.

There are 21 middlemen in the town (Appendix iii). Nearly 10,000 silk sarees manufactured every month in Mubarakpur are sold through them. The earnings of the brokers are, therefore, substantial.

The demand of silk sarees manufactured at Mubarakpur is heavy. The town is visited by a large number of wholesale dealers from different parts of the country. A number of them come from West Bengal at the time of Durga Puja. The purchases are made from the wholesale dealers of the town who obtain their supplies from the artisans.

Transport Arrangement

Mubarakpur is not connected by rail. The nearest railway station is at Sathion on the North-Eastern Railway about five miles from the town. A *kankar* road connects the town with the railway station. The finished goods are taken on *ekka* (hackney carriage) and are sent by rail to different parts of the country by the middleman. They are also sent on trucks from the town.

Advertisement

There is no systematic arrangement for the advertisement of silk fabrics manufactured at Mubarakpur. The manufacturing units are small and they have not enough funds to advertise their products. It will be necessary to educate the public about them. In the first place the silk sarees manufactured at Mubarakpur should be sent to exhibitions and fairs held periodically in different parts of the country. It would be a definite benefit if they are displayed in the handicrafts emporiums in different parts of the country. The press may be given information about the types of silk sarees manufactured there. An attractive pamphlet with photographs of sarees giving illustrations of processes and methods of manufacture of different designs will interest tourists and dealers in the country and abroad and will generally help to make the industry known. The issue of the pamphlet, the preparation of articles for the press and the general advertisement of the industry will put it in a strong position.

Suggestions for better marketing

The weavers of Mubarakpur are within the power of middlemen who dominate the trade. The artisans do not get a commensurate share in the profits on account of their malpractices. The multi-purpose co-operative society is the best solution to eliminate their hold from the industry. Through these societies the weavers could be informed of new demands, of new designs and of cheap raw materials. They can arrange the sale of the manufactured products directly to the consumers through the sale depots. The difficulty is that the weavers have been under the control of the intermediaries so long that they can not work on their own account or understand how to work together. It may be difficult to organise them but with proper handling and education they can be combined into a cooperative association for their benefit.

TABLES

TABLE I : *Number of Industrial units and Number of persons employed in production*

Name of Craft	No. of units Surveyed	No. of persons employed in production		
		Persons	Males	Females
Silk Industry	52	260	260	..

TABLE II : *Distribution of artisans communities in units surveyed*

Name of Caste or community	No. of families	No. of male workers	No. of families working in Homes	No. of families working in Workshops
1. Ansari	88	157	51	37
2. Chamar	32	46	..	32
3. Ahir	21	31	..	21
4. Nonia	9	12	..	9
5. Bhar	3	4	..	3
6. Darzi	2	3	..	2
7. Pathan	3	4	..	3
8. Qazi	1	1	1	..
9. Dhunia	2	2	..	2
Total:	161	260	52	109

TABLE III : *Distribution of articles by materials used*

Name of article	Main material	Subsidiary material	Raw material (Place from which imported)
Banarsi Saree	1. *Katan*	1. *Kela*	1. *Katan*—Banglore
	2. Raw Silk	2. Colour	2. *Kachcha Resham*—Japan and West Bengal
	3. *Kalabattu*	3. ..	3. *Kalabattu*—Varanasi and Surat
			3. Colours—Bombay

TABLE IV : *Designs*

Name of Article	Design	Source of design
		Traditional
Banarsi Saree	*Nagsi*	100%
	Skat	,,
	Chunari	,,
	Jungla	,,

TABLE V : *Consumption and sale*

Name of Article	No. of surveyed units which produce for sale in open market.	
	Order of middlemen who advanced money and undertake marketing	Others
Banarsi Saree	52	

TABLE VI : *Cost of Production, sale price and earnings*

Name of article		Cost of raw material per saree	Cost of conversion into finished products per saree	Average sale price of a saree	Brokerage	Average earning per saree
Banarsi Saree	*Nagsi*	Rs. 39.50 P.	Rs. 15·12 P.	Rs. 65·00	Rs. 4·60 P.	Rs. 6·32 P.
	Skat	Rs. 65.50 P.	Rs. 23·25 P.	Rs. 110·00	Rs. 6·87 P.	Rs. 14·38 P.
	Jungla	Rs. 64.50 P.	Rs. 23·25 P.	Rs. 100·00	Rs. 6·00 P.	Rs. 6·25 P.

TABLE VII : *List of skilled craftsmen*

Name of Community	Names of skilled craftsmen
Ansari (Muslims)	1. Shri Sayeed Ahmad
	2. Shri Shukrullah
	3. Shri Nisar Ahmad

APPENDIX I

CENSUS OF INDIA 1961

HANDICRAFT SURVEY SCHEME

Village Schedule of Industries and Crafts

District | Sub-division

Tahsil | N. E. S. Block (if any)

Village | No.

PART—A GENERAL DESCRIPTION OF VILLAGE

Describe briefly

(*i*) Area of village (in acres)

(*ii*) Population

(*iii*) Approximate number of families

(*iv*) Various sections in the village corresponding to communities and their names

(*v*) Distance from nearest railway station (miles)

(*vi*) Distance from nearest main road

(*vii*) Distance from Tahsil headquarters

PART—B ARTISAN COMMUNITIES IN THE VILLAGE (*Tribal & Non-Tribal*)

1. Name of caste or community	2. Approximate number of families	3. Total number of adult workers		4. Number of families working under co-operation	5. Number of families working in own houses or in workshops set up by their employers	
		Males	Females		own houses	In employers workshops
1.						
2.						
3.						
4.						
5.						

6. Names of articles produced. Describe the articles and mention approximate sizes and heights.	7. Main material used	8. Subsidiary material used	9. Whether raw material is imported and if so from where ? What are the main ingredients ?
1.			
2.			
3.			
4.			
5.			

10. Who gives the designs ?	11. Give the names of the designs	12. Describe colours used. How are the colours obtained ? Give value of colours/chemicals used as percentage cost of production.
1.		
2.		
3.		
4.		
5.		

13. Describe the tools used Give pencil sketches and photographs separately.)	14. Who make these tools and from were are they imported ?	15. General description of workshop
1.		
2.		
3.		
4.		
5.		

16. When did the community come to this village ? Who were the patrons ? How old is this craft in this village ?	17. Describe legends or myths current on the origin of the community
1.	
2.	
3.	
4.	
5.	

18. Are there any villages in the neighbourhood where branches of these communities live ? If so, give name of village (s) and community.

19. Do the communities produce for their own use entirely ? Describe whether for domestic or ceremonial purposes.

20. Whether they produce entirely for others in exchange for money or kind. If so, who are the customers and to which communities do they belong ?

(*i*) Are they for domestic use ?

(*ii*) Are they for ceremonial or ritualistic purposes ? If so, for which ceremony or ritual ?

21. Whether the communities produce for themselves or for sale ?

(*i*) Describe types of objects for own domestic or ceremonial use. Mention heights of objects.

(*ii*) Describe types of objects for sale. Mention heights of objects.

22. Do the communities produce for sale in open markets, *hats* and *males* ? Mention the markets, *hats* or melas and the occasions.

(*i*) Do they make to the order of middlemen who advance money and undertake marketing facilities ?

23. If there is a cooperative society are there members in it who belong to different castes ?

24. Give the names of the designs and myths or stories behind the *names*, *i. e.* explanation of what the design stands for and the shape or decoration of objects.

25. Describe various processes of production.

(Please describe stage by stage and take photographs wherever possible. Photographs should be supplemented by pencil sketches or surface forms, design, shapes, colours and processes of paper if necessary for sketches of stage.)

(*i*) First Stage

(*ii*) Second Stage

(*iii*) Third Stage

(*iv*) Final and finishing stage.

25. A—Cost of production, sale price and earnings.

(*i*) Price at which raw material is available ;

(*ii*) Cost of conversion into finished products ;

(*iii*) The usual sale price of finished good; and

(*iv*) Wages earned.

26. Give a list of very skilled craftsmen of each community.

PART C FOR TRIBAL COMMUNITIES SPECIALLY

27. Is this a tribe where every household produces things for its own use or the use of the community ?

28. Is this a tribe of which only particular sections produce particular things ? If so, which sections produce which things ? Mention names.	Name of section of Tribe	Name of articles produced
29. Is this a semi-tribal community and does it produce articles for neighbouring tribes ? If so mention the names of the tribes for which they produce and the names of articles.	Name of neighbouring Tribes	Name of articles produced for them
30. Does this tribe produce articles for non-tribal or advanced communities ? If so mention names of these communities and the names of articles.	Name of non-tribal or advanced communities	Name of articles produced for them

APPENDIX II

List of Wholesale Dealers in Mubarakpur :—

1.	M/S	Haji Mohd. Sayeed & Hazi Rehmatullah
2.	"	Abdul Haq & Abdul Mughni
3.	"	Ganga Dhar & Sons
4.	"	Narain Dass Agrawal & Sons
5.	"	Husain Ahmad & Sons
6.	"	Abdulla & Sons
7.	"	Mohd. Umar & Abdul Qayam Seth
8.	"	Mohd. Yaseen & Mateen
9.	"	Mohd. Zaheer & Mushtaq Ahmed
10.	"	Mohd. Nisar Ahmed & Sons

APPENDIX III

List of Brokers and Commission Agents in Mubarakpur :—

BROKERS

1. Haji Jumman
2. Haji Abdul Rehman
3. Shri Fateh Mohammad
4. Shri Mohd. Husain
5. Shri Mohd. Ibraheem
6. Shri Mohd. Nazeer
7. Shri Abdul Hamid
8. Shri Ali Asghar
9. Shri Mohd. Zaqi

COMMISSION AGENTS

1. Shri Abdul Qayum Seth
2. Shri Mustafa Grahastha
3. Hazi Yad Ali
4. Shri Molvi Abdul Sattar
5. Hazi Abdul Sattar
6. Shri Permeshwari Agrawal
7. Shri Nand Lal Gupta
8. Shri Sita Ram Agrawal
9. Shri Badri Nath
10. Shri Kishun Mahraj
11. Hazi Yusuf
12. Hazi Waliullah