PRG. 124. A (1) (N)
750



CENSUS OF INDIA 1961

VOLUME X

MAHARASHTRA

PART VII-A(1)

HANDICRAFTS IN MAHARASHTRA

HIMROO WEAVING

Prepared by

THE MAHARASHTRA CENSUS OFFICE, BOMBAY

1966

PRINTED IN INDIA BY THE MANAGER, GOVERNMENT CENTRAL PRESS, BOMBAY AND PUBLISHED BY THE MANAGER OF PUBLICATIONS, DELHI-8

Price—Rs. 2.25 or 5sh. 3d. or 81 Cents

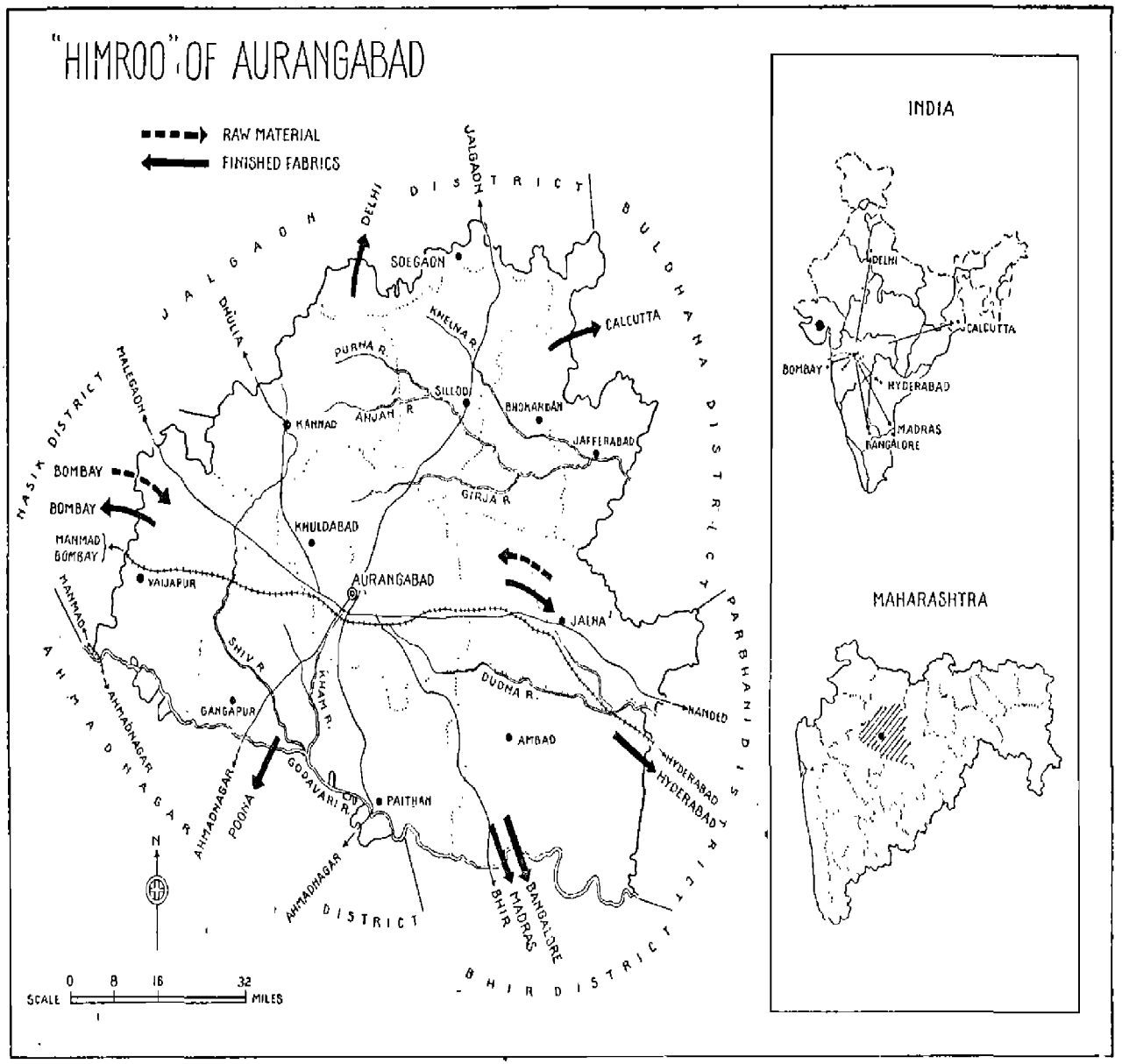
"HIMROO" OF AURANGABAD
RAW MATERIAL
FINISHED FABRICS
JALGAON DISTRICT
BULDHANA DISTRICT
PARBHANI DISTRICT
BHIR DISTRICT
AHMADNAGAR DISTRICT
NASIK DISTRICT
JALGAON
DELHI
DHULIA
SOEGAON
KHELNA R.
CALCUTTA
PURNA R.
MALEGAON
SILLOD
BHOKARDAN
KANNAD
ANJAN R.
JAFFERABAD
BOMBAY
BOMBAY
GIRJA R.
KHULDABAD
MANMAD
BOMBAY
AURANGABAD
VAIJAPUR
JALNA
MANMAD
SHIV R.
KHAM R.
DUDHA R.
NANDED
GANGAPUR
AMBAD
AHMADNAGAR
POONA
GODAVARI R.
PAITHAN
HYDERABAD
AHMADNAGAR
DISTRICT
BHIR
MADRAS
BANGALORE
N
0 8 16 32
SCALE
MILES
INDIA
DELHI
CALCUTTA
BOMBAY
HYDERABAD
MADRAS
BANGALORE
MAHARASHTRA

CENSUS OF INDIA 1961

Central Government Publications

Census Report, Volume X—Maharashtra, is published in the following Parts

I-A and B	..	General Report
I-C	..	Subsidiary Tables
II-A	..	General Population Tables
II-B (i)	..	General Economic Tables—Industrial Classification
II-B (ii)	..	General Economic Tables—Occupational Classification
II-C (i)	..	Social and Cultural Tables
II-C (ii)	..	Migration Tables
III	..	Household Economic Tables
IV	..	Report on Housing and Establishments
V-A	..	Scheduled Castes and Scheduled Tribes in Maharashtra—Tables
V-B	..	Scheduled Castes and Scheduled Tribes in Maharashtra—Ethnographic Notes
VI (1—35)	..	Village Surveys (35 monographs on 35 selected villages)
VII-A (1—8)	..	Handicrafts in Maharashtra (8 monographs on 8 selected Handicrafts)
VII-B	..	Fairs and Festivals in Maharashtra
VIII-A	..	Administration Report—Enumeration (For official use only)
VIII-B	..	Administration Report—Tabulation (For official use only)
IX	..	Census Atlas of Maharashtra
X (1—15)	..	Cities of Maharashtra (15 Volumes—Four volumes on Greater Bombay and One each on other eleven Cities)

State Government Publications

25 Volumes of District Census Handbooks in English

25 Volumes of District Census Handbooks in Marathi

Alphabetical List of Villages and Towns in Maharashtra.

FOREWORD

ONE OF THE FIRST STEPS to be taken in the First Five-Year Plan was the establishment of six Boards for the promotion of handicrafts, village and small industries : (1) The Khadi and Village Industries Board ; (2) The All India Handicrafts Board ; (3) The All India Handloom Board ; (4) The Central Silk Board ; (5) The Coir Board ; and (6) The Small Industries Board.

The rapid expansion of the activities of these Boards which concentrated not only on production and techniques, but also on organisation, extension, credit, marketing and export, consolidated and enlarged the position that the household industries sector had so long enjoyed in the nation's economic life. It was this fact that forced itself upon the preparations for the 1961 Census and demanded that household industry should be separately investigated for a proper accounting of the nation's manpower, resources and its specific contribution to the national income. The 1961 Census therefore asked a special series of questions on household industry, input of family and hired labour, and the periods over which household industry is conducted. It was felt, however, that an enumeration of the total number of establishments and their industrial classification would be incomplete without a proper description of what they produce and how they produce. It was important to make an assessment of the limits of rigidity within which traditional skill operates. This could be obtained by studying the caste, occupational, social and economic stratifications, the limitations of credit and marketing facilities, the dominance of custom over contract, the persistence of traditional tools and design forms, the physical limitations of transport, communication and mobility, the inability to adopt new lines or adapt to changing circumstances. It was important also to make an assessment of the limits of flexibility that traditional skill is capable of, because the transformation of traditional skills to modern skills is easier said than done and a thorough study may well reveal that it is perhaps cheaper from the social point of view to develop industrial skills from scratch than to try to graft traditional skill on alien soil. A rather tragic case of failure to make what would on the face of it seem a minor adjustment cast its heavy shadow on the nation when it was discovered that goldsmiths used to working on 22-carat gold all their lives felt sadly helpless when asked to work on 14-carat, so narrow and unadaptable were the limits of their skill and proficiency and so rudimentary the tools and equipment with which they and their forefathers had worked. This fiscal accident revealed that tools are even more important than skills.

An early opportunity was therefore taken in February 1960 to suggest to State Census Superintendents that the Census provided a unique opportunity for conducting and documenting a survey of this kind. As such a survey was quite outside the usual terms of reference of Census work it was thought prudent cautiously to feel one's way with the thin end of the wedge of what would, it was hoped, prove to be an exciting pursuit. It was therefore considered the wiser course to wait until the State Census Offices felt so interested that they would no longer take the inquiry as an imposition but rather want to do it on their own and ask for the necessary staff and equipment. This office, too, in its turn, could make use of the interval to organise and elaborate the design of inquiry in order to feed the appetite that work in progress would serve to whet. Because it was a labour of love, sought to be unobtrusively thrust on one's colleagues and because the inquiry itself was so vast that normally it would demand in any country as big a set-up, if separately established, as the Census organisation itself and that over a much longer period, and because it was almost a pioneer venture, nothing like it having been undertaken since the 1880's, it was decided to move towards a build-up by stages, to let the inquiry unfold itself only as fast as my colleagues chose to ask for more.

Thus, in the first circular of 18th February 1960, it was suggested that the inquiry might be conducted through the agency of the Development Department, the State Director of Industries, the Director of Tribal Welfare, the Registrar of Co-operative Societies and other organisations concerned with the promotion of household industry. A draft questionnaire containing 30 questions

in 3 parts was recommended for canvassing. It was suggested that information on this questionnaire, village by village and area by area, might either be obtained through the regular departmental channels of the State Government, or through the newly set up Census organisation, or through the hierarchy of the newly created Panchayats. Stress was laid on the need of photographic documentation and illustration of designs, shapes and forms not only by photographs but with the help of line drawings or sketches together with a full description of the materials used.

Almost the whole of 1960 and the first half of 1961 were spent in organising and taking the Census count, although several States even during this period had not allowed the grass to grow under their feet but made exploratory studies and decided in their minds how the inquiry should be organised. A series of regional conferences held in Trivandrum, Darjeeling and Srinagar in May and June 1961 revealed much enthusiasm among State Superintendents to proceed with the survey, but the need of separate staff and equipment was felt at the same time as the realization dawned that this was much too serious an enquiry to be treated casually and left to be achieved through the usual administrative channels and State Census Superintendents proceeded to augment their staff with qualified research and investigating officers, technical persons, photographers, artists, draughtsmen and other trained personnel.

This was followed by rapid progress in co-ordination between the Central and State Census offices in the matter of exchange and processing of information, documentation and investigation, of assisting each other with trained investigators and in editing and finalizing drafts, layouts, presentations.

Mention has been made of a questionnaire in three parts and thirty questions. The idea was to make a beginning with empirical, analytical studies based on a structured questionnaire which would replace general descriptive accounts that had obtained so far. The primary aim was to obtain a picture as much of the artisan himself as of his craft, to obtain a perspective of the artisan and his craft in his social and economic setting, the extent to which tradition bound him and the winds of change ruffled him, the extent of his mobility and immobility, the conditions of market, credit, new contacts and designs in which he operated, the frame of new as well as traditional producer-customer relationships in which he still worked, and how far he was ready to pierce his own caste-tribe socio-economic cocoon and make a break through to new opportunities promised by the Five-Year Plans. The aim was to hold up the mirror to hereditary skills struggling with the dialectics of tradition and change.

Thus the first part of the questionnaire, purporting to be a village schedule, sought to take account of the size and population of the village, its remoteness from or proximity to centres of trade and commerce, in short, the degree of isolation in which the artisan worked, and the relative strengths of various communities in the village which would afford clues to social interdependence and the prevalence of the JAJMANI system. The second part was devoted to artisan communities in the village ; the several castes of artisans, the number of families in each, the total number of workers, males and females, the extent of co-operative activity among them, the extent of dependence upon employers and of wage or contract labour. There were questions on the raw materials used, the means of their procurement, the possible extent of dependence on others for raw materials, the extent of the material that artisans can handle within the limits of their skill. There were other questions on the exchange and flow of designs, the use of colours, the ancientness of the craft and legends associated, the colonization of the craftsman, on patrons and customers and on social and economic contact with the world inside and outside the village. There were specific questions on the workshop itself and particularly the tools and the source of supply of these tools, because it was felt that tools decide everything and are the surest index of inertness or flexibility. Separate blocks of questions were designed to bring out the ramifications of artisan castes throughout the country and the ways they sustained themselves, the type of clientele they catered for, the extent to which they operated on

money or barter or service, how specialized their craft was, how wide the market, how dependent they were on their socially preordained clientele and how restricted the latter was by the seemingly unalterable laws of social custom ; the extent to which they could operate in the open market, the range of their wares and the sizes to which these were ordinarily restricted either by the limits of their own skill or the length of their customers' pursestrings. Inquiries were to be made about the operation of middlemen and of co-operative societies, the people who gave new designs and demanded new products. Finally, the several stages of production of the articles themselves were to be fully described including the final and finishing stage and a list of very skilled craftsmen of each community was to be furnished. The third part was devoted specially to tribal communities and designed to find out how self-sufficient or dependent they were on the production and supply of manufactured goods, the extent to which they produced themselves or depended on others, their contacts with other communities and the specific forms of production and commerce through which these contacts were maintained.

Particular emphasis was laid on the need of obtaining as full an account as possible of unique regional design differentiations as they reflect not only the very culture patterns of the country but the persistent inventive faculties of the craftsmen. The importance was emphasised of giving full attention to articles of domestic use as it is in their shapes, designs and forms that the culture patterns and traditional skills persist most tenaciously.

Simultaneously with the investigation of specific crafts, State Superintendents proceeded to compile a comprehensive list of all types of handicrafts obtaining in their State. As for the specific crafts to be investigated several tables were devised from the structured questionnaire in order to guide investigators toward pointed observation and analysis, to enable them to write, not just general descriptions, but with their eye on the object and on facts.

Investigations conducted between September 1961 and May 1962, including a study group of all States and the Social Studies Division in December 1961 at Delhi, stimulated many of the States into going in for a much enlarged schedule. The revised village schedule itself, the counterpart of the first part of the February 1960 schedule, contained 19 large sections containing elaborate and probing questions. The Family Schedule for practising artisan families similarly contained 19 main questions each sub-divided into many questions. The Family Schedule for non-practising artisan families contained 21 questions. There were schedules for the study of co-operative societies, of production-*cum*-training centres, and of consumer's preference. This enlarged schedule of investigation, in the formulation of which the States themselves actively assisted, was greatly welcomed. The surveys that will appear in this series will therefore consist of two main types : (*a*) those based on the original short schedule and (*b*) those based o ι the much enlarged schedule. In some cases Census Superintendents felt enthused enough to scrap the work based on the original short schedule and do it over again on the enlarged schedule. In the meantime much experience was gained on the analysis of facts and figures to clothe each observation with plenty of authentic information so that the reader could make his own judgment instead of being expected to see all the time through another pair of eyes.

This programme of survey of handicrafts and household industries has been fortified by several ancillary surveys, each one of which would deserve major attention. Along with the survey a compilation has been made of all handicraft centres in each State and an inventory prepared of skilled craftsmen. Photographic and other documentation has been built up to constitute what may now be regarded as the most considerable repository in the country. Elaborate and accurate maps of craft centres in talukas, tehsils and districts are either ready or under preparation. A full census of all fairs and festivals, weekly hats and markets, throughout India, has been taken and is being published for the first time. Andhra Pradesh has embarked upon a project of chronicling the social and religious antiquity and uniqueness of every fair and festival. A separate volume will be devoted to each district

which promises to be of the utmost value to sociologists and orientalists. A full and complete inventory, replete with sketches and measurements of every object, has been prepared of exhibits in museums of tribal crafts in India. There has been a fairly satisfactory survey of houses and buildings, indigenous architectural designs and use of local building material of the whole country. All this has been entirely a labour of love, patiently organized and executed under great strain and in disregard of health and comfort, for which I take this opportunity of expressing my appreciation and grateful thanks to my colleagues.

ASOK MITRA,
Registrar-General, India

NEW DELHI,
July 30, 1964

PREFACE

This Part of the Census Report presents a monograph on the "Himroo Weaving at Aurangabad" which is one of the following eight handicrafts selected for detailed study in Maharashtra :—

(1) Himroo Weaving at Aurangabad, district Aurangabad.
(2) Clay Images of Ganapati and Images of Plaster of Paris at Pen, district Kolaba.
(3) Wooden Toys at Savantvadi, district Ratnagiri.
(4) Coir Ropes at Achare, district Ratnagiri.
(5) Glass Bangles at Tarapur, district Thana.
(6) Silver Ornaments at Hupari, district Kolhapur.
(7) Kosa Silk at Ganeshpur, district Bhandara.
(8) Musical Instruments — flute, at Amravati, district Amravati.

For various reasons it has not been possible for the Maharashtra Census Office to strictly follow the scheme referred to by the Registrar General, India, in his " Foreword ". The prescribed village schedules could not be canvassed and, therefore, statistical tables based on the village-wise statistical survey covering all household industries with special emphasis on rural arts and crafts were not prepared. The scope of the study was restricted to (i) collection of data on important aspects of crafts, *viz.*, sources of raw material, fuel, service condition, wages, processes involved in manufacture, market for finished products etc. at the selected centres only from the manufacturing establishments and households connected with the selected crafts and (ii) tabulation of data regarding household industries including arts and crafts from columns 4 to 8 of the Census Houselists according to a codified list of Common Household Industries prepared by the Registrar General's Office on the basis of the Indian Standard Industrial Classification. The data collected under the former formed the basis of the monographs on eight selected crafts and the tables prepared from the Census Houselists showing for each village, taluka and district the distribution of establishments and workers of different household industries classified upto minor group codes of the Indian Standard Industrial Classification are published in Part II of the District Census Handbooks.

We are very much grateful to Shri Asok Mitra, Registrar General, India, for his encouragement and inspiring guidance to us in various Census assignments including the Rural Craft Studies. Our thanks are due to Dr. Roy Burman, Officer on Special Duty, and Mrs. Ruth Reeves of Handicrafts Section of the Registrar General's Office for their valuable suggestions to improve the Monograph.

During the period when the survey of this craft was undertaken valuable assistance was rendered to us by Md. Abdulla Md. Azam, Proprietor, Abdulla Bros., Aurangabad and Sarvashri Abdul Rauf Qureshi, Chairman, Himroo Kinkhab Weavers' Co-operative Society, Khaja Gulam Rasool Taher, Secretary, Himroo and Nawabpura Weavers' Industrial Co-operative Society, Aurangabad and S. Gangaram, Himroo Organizer, Aurangabad.

We take this opportunity to thank Government of Maharashtra for having given permission to reproduce in this Monograph colour plates of Himroo Cloth designs.

The Survey was conducted by Shri V. B. Aradhye, Statistical Assistant, under the supervision of Shri N. Y. Gore, Tabulation Officer. The maps and line drawings appearing in this Monograph are prepared by Shri S. Y. Pradhan, Draughtsman. The entire work of the survey of selected handicrafts was carried out under the guidance of Sarvashri G. G. Laulkar and V. B. Sawant, Deputy Superintendents of Census Operations.

I am thankful to Shri S. A. Sapre, Manager, Government Central Press, Bombay, for the expeditious printing of the Report.

BOMBAY :
28th February 1966

D. V. RANGNEKAR

Vd 4948—2

CONTENTS

	PAGE
FOREWORD	v
PREFACE	ix
CHAPTER I—Introduction	1
CHAPTER II—Beginning of the Craft	3
CHAPTER III—Technique of Production	7
CHAPTER IV—Craftsmen Families	23
CHAPTER V—Structure of Himroo Craft	27
CHAPTER VI—Economic Aspect	32
Conclusion	35
APPENDICES—	
1—Statement showing the time required for different processes to weave a Himroo Cloth of size 30 yds. × 30".	37
2—Designwise Production and Sale of Himroo Cloth	38
3—Statement showing Retail Prices of Himroo Shawls at Aurangabad	39
4—Statement showing Prices of raw material prevalent in 1960-61	40
MAPS—	
Map showing Indian Markets for Himroo Cloth	ii
Map of Aurangabad showing locations of Himroo Weaving Centres	6
SKETCHES AND GRAPHS—	
Himroo Loom	9
Shuttle, Pirn and Shuttle with Pirn	10
Akoda and Ambuda	11
Dyeing Vat	12
Bobbin, Wooden Stand and Warp Winding	17
Wooden Frame	18
Pirn Winding and Parti	20
Production of Himroo Cloth	34
Sales of Himroo Cloth	34
PHOTOGRAPHS—	
Nawabpura—the locality famous for Himroo Weaving	13
Twisting the new warp with the old one	13
Weaver at his pit-loom and the helper boy	13
Old designs	14
New designs	15
Weft yarn on Parti transferred to Kandis or Stalk pieces	16
Pit-loom along with the " Jala "	16
Weft yarn transferred from " Kupe " to the " Parti "	16



SPECIMENS OF HIMROO CLOTH

CHAPTER I

INTRODUCTION

India is famous for the art of cloth weaving since olden times. It used to produce not only the essential cloth for daily wear but the fancy cloth depicting the skill of the craftsman. Colourful fabrics of cotton and silk were woven in India for generations by the skilled workers who were trained in their early childhood at the pitlooms. India was perhaps the first country to attain perfection in the art of weaving and its marvellous woven fabrics are very old.

"There are passages in the Rig Veda from which we can conclude that the art was carried to a high state of excellence. One hymn refers to Agni for light regarding the mysteries of sacrifice, but the language used is that of weaving :

'I know not either warp or woof
I know not the web thy weave.'

There is also a reference to the shining gold woven cloak (hiranya-drapi) and in the Mahabharata to the 'Manichira'—probably a fabric with pearl woven fringe manufactured in South India. Cotton, silk and woollen stuffs were in common use when our great Epics were written. Banaras silk is also mentioned in the Buddhist Jatakas, and Egyptian mummies are known to have been wrapt in Indian muslin."

["The Arts and Crafts of India and Pakistan" by Shanti Swarup, page 80 (1957)].

The Himroo which forms the subject of this study is a fabric of intricate weave. In the past, these fabrics had a superior brightness and elegance since it was woven in a background of silk with silk or gold in extra weft. But such a class fabric had a limited market. The present Himroo is a fabric with cotton warp and silk, or artificial silk, or rayon weft. The basic cotton material is interwoven with alluring silk designs in many shades. It is a richly multi-coloured and designed cloth ornamented on the principle of extra weft figuring. The word "Himroo" seems to be of Persian origin and in its correct form may be spelt as Himroo (Ham+roo) meaning 'prototype', or 'of similar resemblance or features'. This famous cloth is being produced in the town of Aurangabad where it had reached the pinnacle of prosperity and has survived till this day in spite of depression and keen competition from mill-made cloth.

Aurangabad

Aurangabad, a district and divisional headquarters, in Maharashtra State is situated on the banks of the Kham river between latitude 19° 53′ 59″ North and longitude 75° 22′ 46″ East. It has an area of 15·8 sq. miles and population of 87,579 (1961 Census). Aurangabad is an important station on the Manmad-Kachiguda Railway line and finds a place in the air map of the country, having an aerodrome at a distance of about 5 miles. Good motorable roads connect the town with important cities of Maharashtra. The importance of the town is increasing every day because of the nearness of the world famous Ellora and Ajanta Caves. The town has become one of the principal centres of education in Maharashtra because of establishment of the Marathwada University in 1958.

The town has played an important role in the history of India. It has remained capital of many Kings. The present town was founded by Malik Amber in 1610 near the site of a village called Khadki. When Malik Amber shifted his capital to Aurangabad, it became an important and imposing town.

The water supply system introduced by him was perfect. It has even been acclaimed by many scientists. The ash pipes introduced in those days are still seen in some parts of the town. In 1652, Aurangzeb was appointed as subhedar of the Deccan. He made this town a seat of his administration and changed its name to Aurangabad around 1657. The town was surrounded in 1682 by a 2-mile long fortified wall to protect it from any sudden attack, particularly from Marathas. During the days of Aurangzeb, Aurangabad had reached the peak of its glory, but its importance ceased after the death of Aurangzeb.

According to the 1961 Census the population of Aurangabad is 87,579 and it is classified as under into

workers and non-workers, the former being further sub-divided into nine industrial categories :—

Category of Worker/Non-worker	Population		
	Persons	Males	Females
I. As Cultivator	764	626	138
II. As Agricultural Labourer ..	274	153	121
III. In Mining, Quarrying, Livestock, Forestry, Fishing, etc.	929	601	328
IV. At Household Industry ..	1,352	834	518
V. In Manufacturing other than Household Industry.	4,454	3,883	571
VI. In Construction	1,412	1,167	245
VII. In Trade and Commerce ..	3,645	3,376	269
VIII. In Transport, Storage and Communication.	1,932	1,883	49
IX. In Other Services	11,673	9,249	2,424
Total, Workers ..	26,435	21,772	4,663
Total, Non-Workers ..	61,144	25,550	35,594
Total	87,579	47,322	40,257

From the above table we see that 69·82 per cent of the total population are non-workers and 30·18 per cent are workers. The non-workers include pensioners, retired persons, students, housewives, etc.

Industrially speaking, this is an underdeveloped area like the other districts of Marathwada. No heavy industries exist in the town. Due to rich black soil prevalent in the district, cotton has become the major crop and is feeding about 30 cotton ginning and pressing factories. Some of the industries worth mention in the town are :—

Description	Number
(1) Cotton Textile Mill	1
(2) Silk Factories	2
(3) Flour Mill	1
(4) Hume Pipe Factory	1

The major cottage industries prevalent in the district comprise handloom weaving, leather-making, bidi-making, wool weaving, etc.

The town is famous for many crafts which flourished in the past. In the District Gazetteer (1884) a detailed account of the arts and crafts then prevalent in the town is given. Some of the crafts having artistic appeal and for which Aurangabad was famous were Pataos, Himroo and Mashru, Kinkhab, Zari Laces and Kalabatu, Brocades, Pitambers, etc. The description of each is as under *:—

(*i*) Pataos ..	These were pure silk fabrics woven there and striped, checked and figured and the longitudinal ends being bordered with representations of flowers, leaves, springs, birds, etc. in coloured silk. The weavers were called ' Patwis '.
(*ii*) Mashru ..	This is basically a pure silk cloth with designing done in *zari* work and was having the lustre of satin. The cloth was mainly used for wedding sherwani (long coat) and for pyjamas of ladies.
(*iii*) Himroo ..	This is a fabric of intricate weave. It is a fabric with cotton warp and silk or artificial silk or rayon weft.
(*iv*) Kinkhab ..	It is an interweaving of silk and gold threads in a rich variety of colours and floral designs.
(*v*) Zari Laces and Kalabatu.	Gold and silver laces were being manufactured for bordering sarees.
(*vi*) Brocades ..	This was being used for trimming dresses, caps, etc.
(*vii*) Pitambers ..	These fabrics were mainly of two colours one in the front and another in the back and were generally made of silk throughout and brocaded.

*See pages 2-4, Draft Report " The Himroo Weaving Craft of Aurangabad (Maharashtra) " prepared by the Planning and Research Section (1963) of All India Handicrafts Board, Ministry of Commerce and Industry, Government of India.

A special survey of the Himroo Handicraft was undertaken in the month of February 1962. The purpose of the study was to asses the present position of the age-long craft which had attracted not only Indians but foreign tourists also. Study was confined to Aurangabad town only, and all the establishments engaged in the production of Himroo were covered. An effort is made to give a detailed account of the industry since its inception, raw material, manufacturing process, cost of production, marketing, etc.

Material presented here has been collected through personal visits to the centres and interviews with a few weaver families. The data contained in the report refers to the year 1960-61, unless otherwise mentioned.

CHAPTER II

BEGINNING OF THE CRAFT

Aurangabad has been famous for Kinkhab, Mashru and Himroo cloth for centuries.

In addition to Aurangabad, Banaras, Murshidabad and Tanjore are at present the chief centres of production of this material, woven so skilfully that it is as soft and light as pure silk. The design of hunting scene, ' Shikargah ', once produced in Banarasi Kinkhab was considered to be unique. " The Mohammedan being prohibited from the wearing of pure silk had to wear other types of fabrics known as Mashru and Himru, which are a mixture of cotton and silk, and in appearance as pleasing as silk, but still within the ' permitted ' category ."* The dazzling ' Mashru ' brocades of Aurangabad were once well known. The uniforms to be worn by courtiers in attendance in the Darbars or in the royal presence were invariably made of Mashru.

There is hardly any published material on ' Himroo ' cloth weaving craft. Authentic information pertaining to the last few decades is also not available. The present account is based to some extent on oral evidence tendered by the individual craftsmen and the office-bearers of the two Himroo Co-operative Societies at Aurangabad

The origin of Himroo craft at Aurangabad is linked with the advent of Muslim rule in Southern India.† In fourteenth century, Mohmad Tughlak shifted his capital to Deogiri (now known as Daulatabad) situated at a distance of 10 miles from here. Many artisans came along with him and settled around the capital. This craft was patronized by the nobles and courtiers of the Darbar as it was a fashion to wear this costly fabric, particularly at the time of attending the Darbar. Three centuries later, when Aurangzeb made Aurangabad his centre of administration these weavers shifted from Daulatabad to Aurangabad. Since then the name of Aurangabad came to be associated with the weaving of Himroo cloth. It seems the craft had quite a flourishing period for two hundred years as the Himroo cloth was very popular among the Nawabs. It is reported that to meet the demand of this fabric nearly 500 to 600 looms were working in the town. But gradually the craft started declining due to change in the tastes of consumers and lack of patronage. During 1930's the former Hyderabad Government had taken some steps to give fillip to this craft by giving bulk orders from palace circles and also by intensive publicity. But the period of World War II again hit the craft and many establishments were closed down. Many weavers who were engaged in this profession for generations had to switch over to some other occupation In the year 1949. there were about 150 artisan families but according to the " Rural Economic Enquiries in Hyderabad State, 1949-51 " by Prof Ayangar, only 30 families were actively engaged in the craft.

Amongst the recent patronages received by this declining craft, mention may be made of the orders placed in the year 1955 by Princess Dure Shahwar, the daughter-in-law of the present Nizam of Hyderabad, for the supply of Kinkhab cloth worth Rs. 20,000. The cloth supplied included mainly tapestry to decorate her palace. In the recent past, Smt. Kamaladevi Chattopadhyay, Chairman, All India Handicrafts Board, placed orders for supply of Himroo cloth worth Rs. 6,000 for Delhi Emporium and promised financial assistance for the craft. It is reported that on the recommendations of Smt. Kamaladevi Chattopadhyay and Miss Padmaja Naidu, the All India Handicrafts Board is paying special attention to this craft.

On the initiative of the former Hyderabad Government the weavers had been brought under Co-operative fold. After the reorganisation of States, the Andhra Pradesh Government evinced interest in the craft and wanted to implant it in its own territories. This has resulted in migration of some of the families from Aurangabad to Hyderabad where they got looms and started manufacture of this fabric. It is reported that the craft at Aurangabad had quite a prosperous period till 1958-59 but since then it is again facing severe competition from the powerlooms of the town.

At the time of the survey in February 1962, five proprietary concerns engaging 55 workers and three co-operative establishments engaging 111 workers were found engaged in the handloom Himroo craft at

---

* " Arts and Crafts of India and Pakistan " by Shanti Swarup, page 81.

† An article by Shri R. C. Parundekar in *Swaraljya Weekly* of 27th January 1962 (A Marathi weekly, published from Poona).

Aurangabad. The Aurangabad District Industrial Co-operative Association, Ltd., also produced Himroo shawls from pure silk and Khadi.

In the powerloom sector there were four factories producing Himroo shawls.

The establishments which are engaged in this craft are spread over in various localities of the town. The area particularly famous for the manufacturing units of Himroo is Nawabpura. In this area concentration of manufacturing units is more than anywhere else. Out of the 8 establishments, four were found in this locality. The other localities where the establishments were found are : Kadim Mondha, Moti Karanja, Jinsipura and Budhi Lane. The production centre-*cum*-showrooms were, however, found only in Nawabpura locality. In other localities there were production centres only.

"HIMROO" WEAVING CENTRES AT AURANGABAD

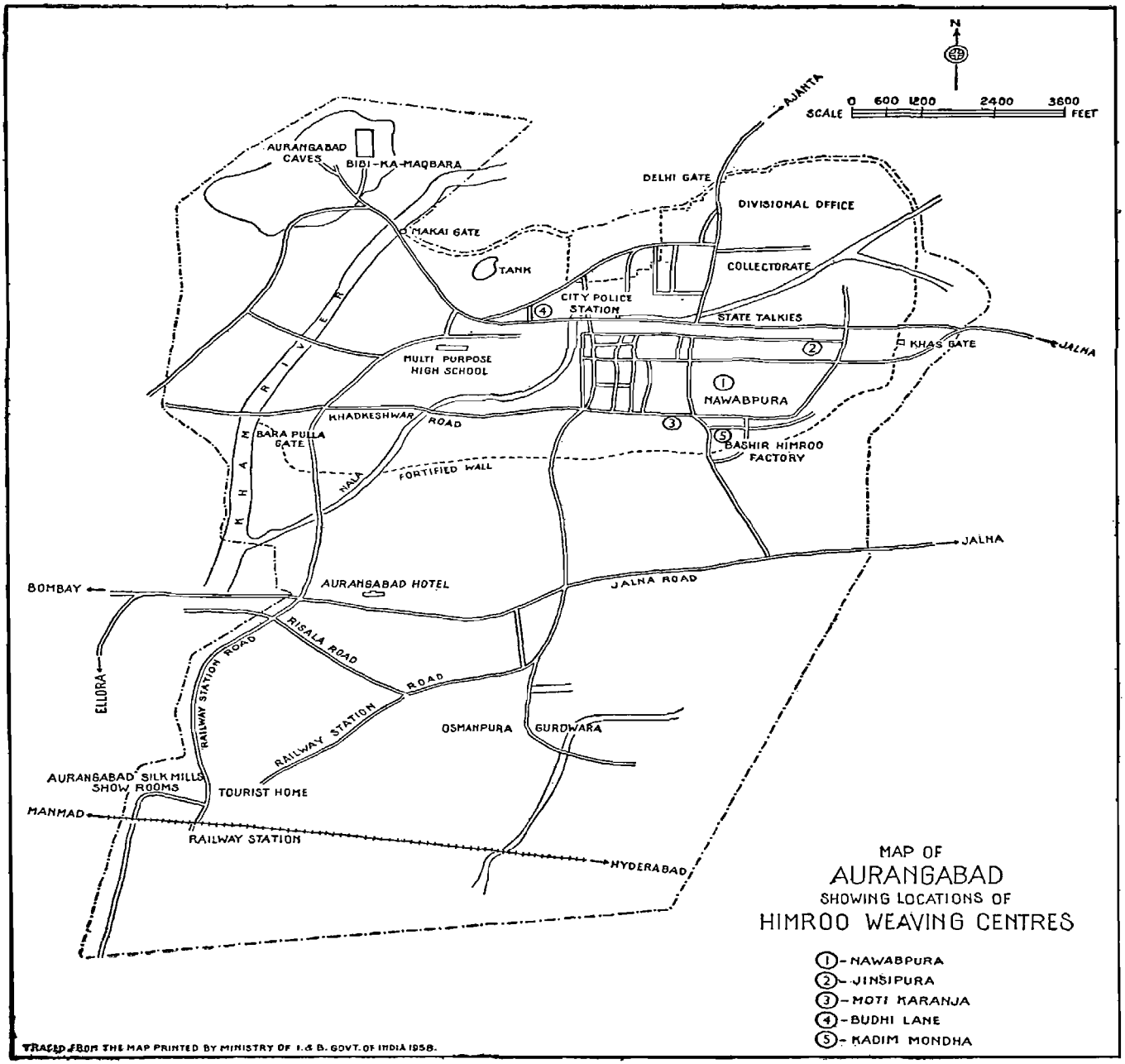
N
SCALE 0 600 1200 2400 3600 FEET
AJANTA
AURANGABAD CAVES
BIBI-KA-MAQBARA
DELHI GATE
DIVISIONAL OFFICE
MAKAI GATE
TANK
COLLECTORATE
CITY POLICE STATION
STATE TALKIES
KHAS GATE
JALNA
MULTI PURPOSE HIGH SCHOOL
NAWABPURA
KHADKESHWAR ROAD
BARA PULLA GATE
NALA
FORTIFIED WALL
KHAM RIVER
BASHIR HIMROO FACTORY
JALNA
BOMBAY
AURANGABAD HOTEL
JALNA ROAD
RISALA ROAD
ROAD
ELLORA
RAILWAY STATION ROAD
RAILWAY STATION
OSMANPURA
GURDWARA
AURANGABAD SILK MILLS SHOW ROOMS
TOURIST HOME
MANMAD
RAILWAY STATION
HYDERABAD
MAP OF
AURANGABAD
SHOWING LOCATIONS OF
HIMROO WEAVING CENTRES
(1) - NAWABPURA
(2) - JINSIPURA
(3) - MOTI KARANJA
(4) - BUDHI LANE
(5) - KADIM MONDHA
TRACED FROM THE MAP PRINTED BY MINISTRY OF I. & B. GOVT. OF INDIA 1958.

CHAPTER III

TECHNIQUE OF PRODUCTION

Locality

Most of the Himroo weaving is carried out in Nawabpura. It is reported, the name 'Nawabpura' was given to this locality since majority of its residents were Nawabs—Muslim nobles—in the past. Even today the same old big structures are seen and most of the owners are Muslims. The locality is situated to the north-east of the town. Nearly all the houses are surrounded by big compound walls about 12 to 14 feet high, the base of which is made of stone and upper portion of bricks and lime. The buildings are generally two-storeyed. Recently some new buildings have come up in the area which are also two-storeyed. Their walls are made of brick and lime and the roofs of R.C.C. slabs.

Workshops

In all there are 8 non-power operated establishments which are engaged in the production of Himroo cloth. Every establishment has its own workshop for carrying out all the processes involved in the manufacture of the cloth. Generally a part of a dwelling is used as a workshop. The type of construction and area of the workshop depends upon the economic condition of its owner. At many places they are built of mud and bricks with roofs of corrugated iron sheets. Hygienic conditions and ventilation of the workshops are found to be very poor. The smallest workshop was that of an individual craftsman and the biggest that of a co-operative society. The built-up area of workshops varied from 150 to 1,500 sq. feet. Generally, the workers report for duty at 9-00 a.m. in the morning and work till 12 noon. In the evening they work from 3-00 p.m. to 6-00 p.m.

Tools and Implements

The tools and implements in vogue are of the same design and make as those in use since the times of their forefathers. The co-operatives have obtained the tools from their members. Nearly all the tools and implements are manufactured through local carpenters. Replacement and repairs, whenever necessary, are also done by local carpenters. The total value of tools and implements including looms used in the craft is estimated at Rs. 22,000 to Rs. 23,000.

A workshop of Himroo cloth requires the following set of tools and implements :—

(1) Loom with all its parts including wooden frame, weaver's beam, pedals, phani (reed) and heddles.
(2) Katla (throw shuttle).
(3) Akoda (wooden plough for holding the Jala threads in position).
(4) Ambuda (V shape hook for lifting Jala threads).
(5) Warp bobbins.
(6) Weft bobbins (*kandi*).
(7) Winding Charkha.
(8) Warping Charkha.

The description and functions of the tools are given below :—

(1) *Loom.*—The loom in use in Himroo weaving is the simplest, known as 'throw shuttle loom'. It is installed in front of a pit $3' \times 3' \times 3'$ at the rear end of which is fixed a wooden plank on the ground level for the weaver to sit on while operating the loom. Opposite to the weaver on the other side of the loom is fixed in the ground a crude wooden bench or stand about $2\frac{1}{2}'$ to $3'$ in height for the helper boy to sit on as shown in the sketch on the page 9.

The loom consists of a wooden frame having four vertical poles at each corner. The warper's beam (*tur*) on which the warp threads are wound is kept on a wooden frame at a height of about 6" from the ground, at a distance of about 6' on the other side of the loom. The warp threads are first passed through a net-work of threads, Jala, and then through four heddles held in position one after the other by strings, the other ends of which are tied to four separate bamboos (*mache*). The bamboos (*mache*) holding the heddles in position are, at the other end, connected to four bamboo pedals or treadles at the feet of the weaver by means of separate strings. The pedals are in a slanting position and below each of them there is a small pit which, besides holding it in position, helps its operation when the weaver presses it with his foot. The particular heddle connected to the pedal is thus lifted up thereby creating the required *shed*. At a distance of about two feet from the nearest heddle, on the weaver's side of the loom, is reed (*phani*) or '*Hatta*' as it is locally

called, through which the warp threads are lastly passed. After passing through the reed the warp threads are finally wound round the weaver's beam which is kept on a wooden frame at the feet of the weaver at a height of about 6" from the ground level. The cost of one loom including heddles and reed at current prices is about Rs. 150.

(2) *Jala.*—The ' Jala ' consists of a bunch of threads (locally called *jala dori*), their number depending upon the design to be obtained, suspended from the ceiling. At a distance of about 4' downwards from the ceiling the threads in the bunch are tied each, to the threads kept below them in a horizontal position (locally called *paga dori*) by means of wooden supports. From the bottom of the *paga dori* twine loops (locally called *nake*) about 3 to 4 inches in length are left hanging to receive the warp threads on their way to the heddles. One warp thread each is passed through every *nake*.

(3) *Phani* (*reed*).—The ' Phani ' as the name suggests is just like a comb. It is made of two wooden planks or ribs placed horizontally one over the other at a distance of about 4½ inches and joined by steel wires inserted at regular intervals—distance between two wires depending upon the density of cloth to be woven. The reed (*phani*) is given numbers from 10 to 120. Reeds (*phanis*) with numbers 60 to 72 are generally in use at Aurangabad. The reed with number 60 has got 30 dents or 60 ends in one inch. The number of the reed is an indication of the quality of the weave, fine or coarse. The reed is held in position by a string the other end of which is tied to the horizontal rods at the top of the loom. It can be moved to and fro by the weaver and is used by him for putting the weft thread, on its passing through the warp by the shuttle, into its proper position by " beating ". The reed is not locally manufactured but is purchased at Bombay. The price of one reed is about Rs. 6·00.

(4) *Heddles.*—The heddle is very simple to look at. The heddles are made of two teak wood ribs adjusted over the loom in a horizontal position, one at the top of the other. Twine loops are fastened to both the ribs at regular intervals, passing the loop from the bottom rib through that hanging from the top and while setting the warp of the loom the requisite warp threads are passed through the top loops of different heddles depending upon the design to be obtained in the cloth. The heddles move up or down by the movement of the pedals at the feet of the weaver. As the heddles move up or down a passage or shed is created in the warp through which the shuttle is plied. The number of heddles to be used depends upon the colours to be interwoven in the cloth. This implement is generally manufactured by the weaver himself and it costs about Rs. 3 to Rs. 4, each.

(5) *Katla* (*throw shuttle*).—It is generally made of Shisam wood (black wood) and the surface is highly finished. A hollow is carved in its middle and it has tapering ends. It is about 9 to 11 inches in length. At one end of the hollow is fixed a screw to hold weft pirn (*kandi*). The pirn in use here is made of stalk. The weft yarn passes through an eye to the other side of the hollow. The shuttle moves swiftly when plied through the shed as its surface is very smooth and well finished, leaving behind the weft yarn.

The shuttles are not manufactured locally but are purchased from merchants at Hyderabad. Their price is about Rs. 2·50 to Rs. 3·00 per piece.

(6) *Akoda* (*wooden plough*) *and Ambuda* (*wooden net-supporter*).—They are made of teak wood and support the ' Jala '. In the actual process of weaving, one heddle goes upwards while others remain in their position thereby forming a shed in the warp threads. The helper boy pulls up some of the Jala threads and twists them with the help of 'Ambuda ' thereby lifting the warp threads passing through the heddle. ' Boxes ' are thus formed in the *paga dori* and to keep the position constant two ' Akodas ', one at each end, are inserted in the boxes so formed. They secure a taut surface. They are locally manufactured by the local carpenters. Their rice ranges from Rs. 2·50 to Rs. 3·00 per piece.

(7) *Warp Bobbin.*—This is used to receive warp threads. This is generally made of teak wood and is 5 inches in length. It comprises two circular discs joined by a circular rod. The warp threads are wound over it. It is not locally manufactured but purchased from Bombay. Each bobbin costs about Re. 0·28 to Re 0·31.

(8) *Kandi* (*weft bobbins*).—These are made of pieces of stalk by the manufacturers themselves. They are about two inches in length and weft yarn is wound over them. They are fixed in the ' Katla ' (throw shuttle).

(9) *Warping Charkha.*—It is a simple tool used in the weaving of Himroo cloth. It comprises a cycle wheel rim fixed on a wooden stand with a handle fixed to it. As the handle is rotated the rim attached

1 REED (HATTA OR PHANI)
2 HEDDLES
3 JALA THREADS
4 PAGA THREADS
5 NAKA THREADS
6 PIT
7 PEDALS
8 WEAVER'S SEAT
9 WEAVER'S BEAM (TUR)
10 SILOT
11 WOODEN PLOUGH (AKODA)
12 AMBUDA
13 HELPER BOY'S SEAT
14 WARPER'S BEAM (TUR)
15 SILOT
16 BARE
17 MACHE

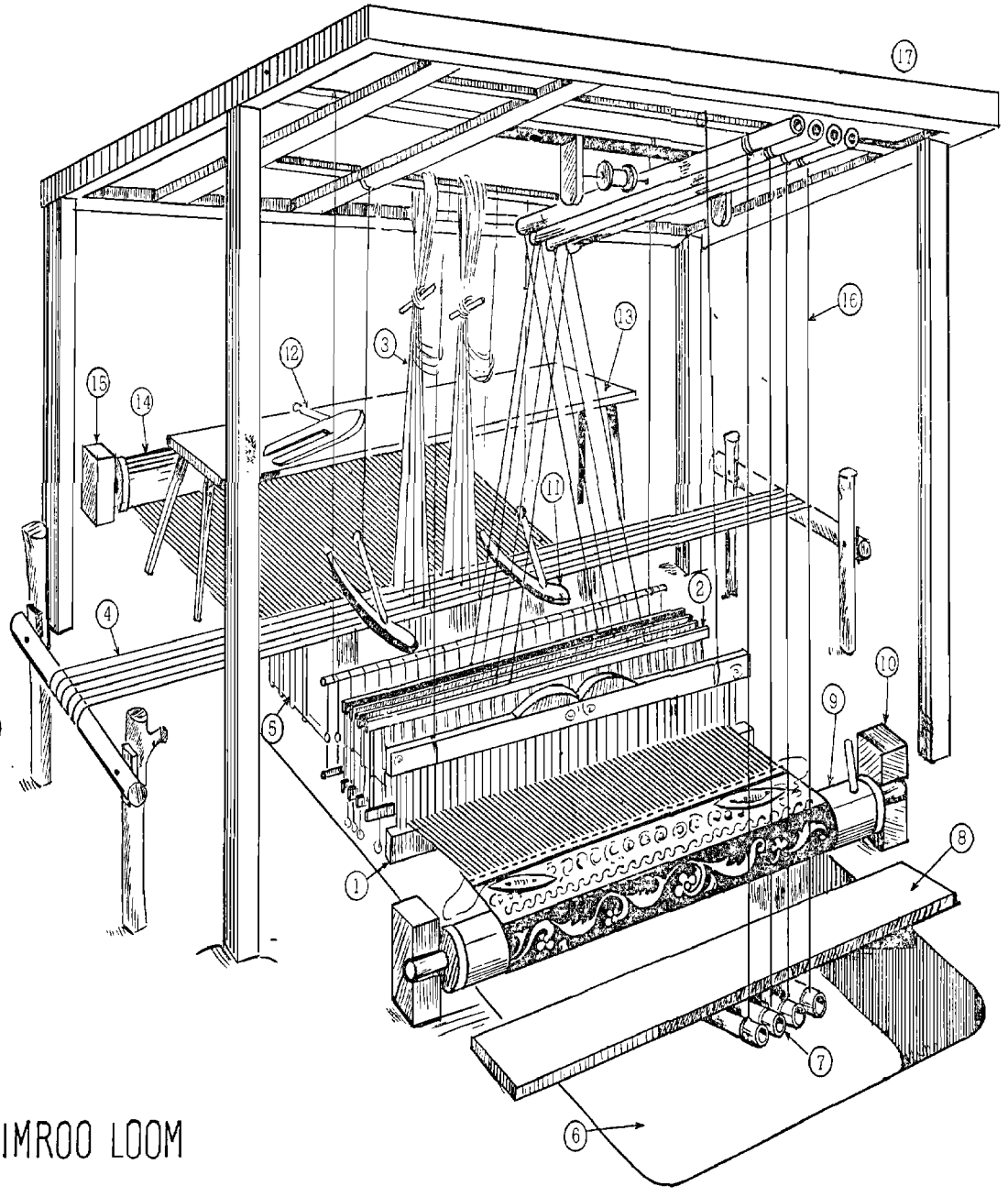

HIMROO LOOM

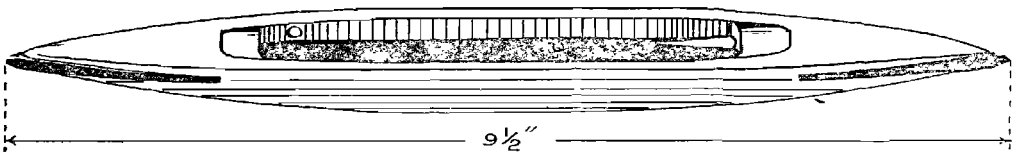

SHUTTLE

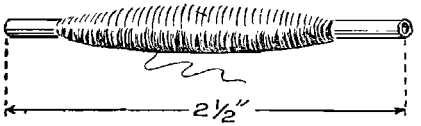

PIRN

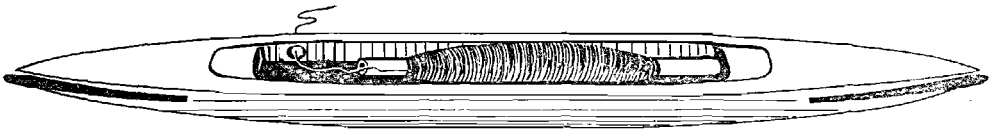

SHUTTLE WITH PIRN

thereto also rotates. At the other end of the stand, opposite to the rim, a small wheel with a pin at its centre, is mounted and a cord passed over the two wheels. The pin is meant to receive bobbins for winding the warp yarns. When the handle of the big wheel is moved, the big wheel rotates and along with it the wheel holding the bobbin, and the yarn gets wound on the bobbin. It is prepared by local carpenters and costs about Rs. 15 each.

(10) *Winding Charkha.*—It is used for winding weft yarn over the stalk pieces. It is just like warping charkha with the only difference that in place of bobbins stalk pieces are used. As the handle is rotated the wheel also gets rotated and along with it the stalk piece, and the yarn from the *parti* (wooden stand) which is kept to the left side of the worker gets deposited over the stalk pieces. It is locally manufactured and costs about Rs. 30 each.

Raw Material

The major raw material required for the manufacture of Himroo cloth is yarn. It is cotton, staple and rayon (art-silk) and Khadi and pure silk yarn. The other requirement is that of dyes. In case of Himroo shawls of pure Khadi, hand-spun cotton and pure silk yarns are used. The raw material and dyes are mainly purchased at Jalna and Bombay. Small purchases are, however, made at Aurangabad only.

The two co-operative societies generally purchase the raw materials and the individual craftsmen purchase their requirements from them.

The description of each item of raw material is given below :—

(1) *Staple Yarn.*—The staple yarn of 2/60s counts is in common use here. During the year 1960-61 the consumption of staple yarn is estimated at 989 lbs. valued at Rs. 5,630, of which the co-operative societies used yarn worth Rs. 4,306 and the rest was consumed by the proprietary establishments as shown below :—

Establishments	Quantity of staple yarn (2/60s) consumed	Value
	Lbs.	Rs.
Co-operative Societies ...	768	4,306
Proprietary Establishments ...	221	1,324
Total ...	989	5,630

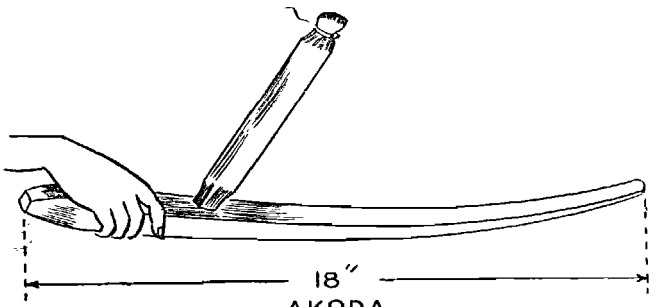

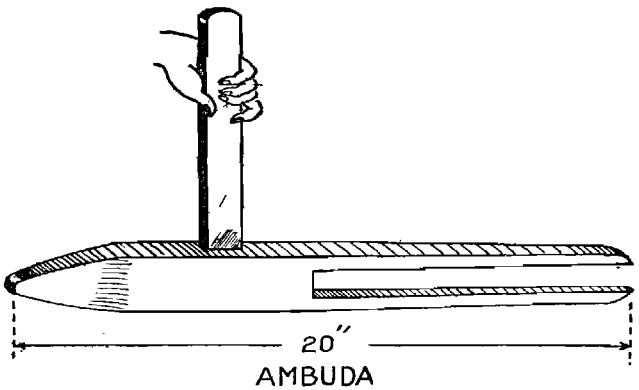

(2) *Cotton Yarn.*—Cotton yarn mainly used is of 20s counts. The consumption of cotton yarn during the year 1960-61 is estimated at 2,560 lbs., valued at Rs. 6,549. Out of this the Co-operative Societies' consumption was 2,030 lbs., valued at Rs. 5,225, and the rest was consumed by the proprietary concerns. The details are given below :—

Establishments	Quantity of cotton yarn (20s) consumed	Value
	Lbs.	Rs.
Co-operative Societies ...	2,030	5,225
Proprietary Establishments ...	530	1,324
Total ...	2,560	6,549

(3) *Rayon (Art-Silk) Yarn.*—Rayon yarn mainly used is of 150 *denier*. Its consumption during the year 1960-61 is estimated at 662 lbs., valued at Rs. 6,619. Out of this the Co-operative Societies consumed 485 lbs., valued at Rs. 4,788. The details of consumption were as under :—

Establishments	Quantity of rayon yarn consumed	Value
	Lbs.	Rs.
Co-operative Societies ...	485	4,788
Proprietary Establishments ...	177	1,831
Total ...	662	6,619

(4) *Dyes.*—The Co-operative Societies only have arrangements for dyeing the yarn. The proprietary establishments get their yarn dyed from them by paying the dyeing charges. Synthetic dyes of different hues and shades are used. The value of dyes and chemicals used during the year 1960-61 is estimated at Rs. 2,724.

(5) *Khadi and Pure Silk Yarn.*—This was found to be used by the Aurangabad District Industrial Co-operative Association for the manufacture of Khadi Himroo shawls only. They used hand-spun Khadi yarn of 20s and 2/40s counts and hand-spun pure silk yarn. Their total consumption during the year was to the tune of Rs. 1,226·78.

The total value of raw materials consumed during the year 1960-61 was thus Rs. 22,749 in which the share of the two co-operative societies was Rs. 17,043 or 74·9 per cent, that of five proprietary concerns Rs. 4,479 or 19·7 per cent and that of the Association Rs. 1,227 or 5·4 per cent of the total consumption of handloom sector.

The figures indicate the major role the co-operative societies play in the production of Himroo fabric. The consumption of the various items of raw material is tabulated below :—

Raw material	Total consumption	Percentage of raw material consumed by the Co-operative Society/ Association
	Rs.	
Staple yarn 2/60s ..	5,630	76·48
Cotton yarn 20s ..	6,549	79·78
Rayon (Art-Silk) yarn 150d.	6,619	72·34
Dyes and Chemicals ..	2,724	100·00
Khadi yarn both cotton and pure silk ..	1,227	100·00
Total ..	22,749	

The consumption of the above items in 1961-62 is given below *:—

Raw material			Value Rs.
Staple yarn 2/60s	..	..	7,752·70
Cotton yarn 20s	..	..	6,018·55
Rayon (Art-Silk) yarn 150d	..	..	8,653·75
Dyes and Chemicals	..	..	1,608·67
Khadi and Pure Silk yarn	..	..	1,302·90
	Total	..	25,336·57

*Page 18, Draft Report on " The Himroo Weaving Craft of Aurangabad (Maharashtra)" prepared by the Planning and Research Section (1963) of All India Handicrafts Board, Ministry of Commerce and Industry, Government of India.

Manufacturing Process

The various processes which are involved in the manufacture of a piece of Himroo cloth are described below.

Stage I (Dyeing)

The first stage in the art of weaving consists of preparation of the yarn for weaving. The threads that run lengthwise are called warp and those which run loose across are known as woof or weft yarn. The preparation of warp requires great care and caution.

The warp yarns which are in common use here are generally of 20s and are usually available in bundles of 10 lbs.

First, the hanks of the yarn are unfastened and knots properly examined, then the knots are loosened and the yarn is kept in a vat containing water for wetting. The yarn is wetted in soft water containing caustic soda and Turkey Red Oil (TRO) (sulphinated castor oil) for an hour or so. The object of wetting the yarn is to make it more absorbent to ensure even dyeing. The yarn is then squeezed with hands, washed and re-squeezed before dyeing.

The yarn so treated is then put in a solution of sodium hydro-sulphite and caustic soda for about 10 minutes and then taken out. The object of this pre-treatment of the yarn before dyeing is to make it suitable for dyeing. The required quantity of dye (in powder form) depending upon the intensity of the shade required, is then dissolved in cold water and poured into the dyeing vat to which sufficient quantity of water is added. The dyeing vat is then kept on the furnace (*bhatti*) which is of the ordinary kitchen hearth type and fed on wood fuel. The dye-solution is heated to boiling point, though it is not technically correct, and the yarn is then immersed in it and kept therein for half an hour, on the furnace. The yarn is then taken out of the solution, squeezed and oxidized in the air. When the required shade has developed on the yarn after oxidization it is immersed in cold water, thoroughly washed, squeezed and is left drying in the sun. The washing process removes the particles of caustic soda and hydros on the yarn. After drying the yarn is ready for further processing.

The warp required for weaving 30 yds. × 30" Himroo cloth takes 4 to 5 hours for this process.

The processes of dyeing 2/60s staple and Art Silk Yarn are slightly different.

The real fast vegetable indigenous dyes were formerly in use for colouring silk. They have now been replaced by aniline dyes of cheaper prices easily obtainable and applicable. They are, however, not as fast as the vegetable dyes. The primary colours, *viz.* blue, yellow and red and the secondary colours, *viz.*, purple, orange, violet and pink in various shades are usually in vogue.

The following is the sketch of furnace used for the purpose of dyeing the yarn :—

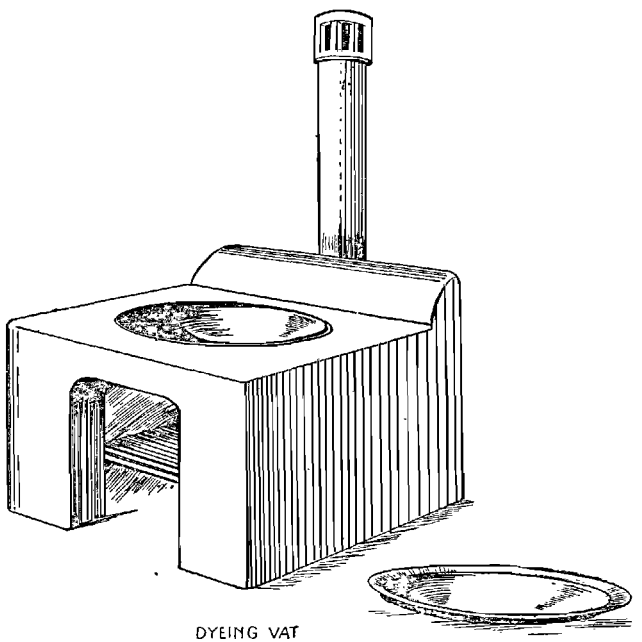

DYEING VAT



Nawabpura, Aurangabad
—the locality famous for
Himroo Weaving

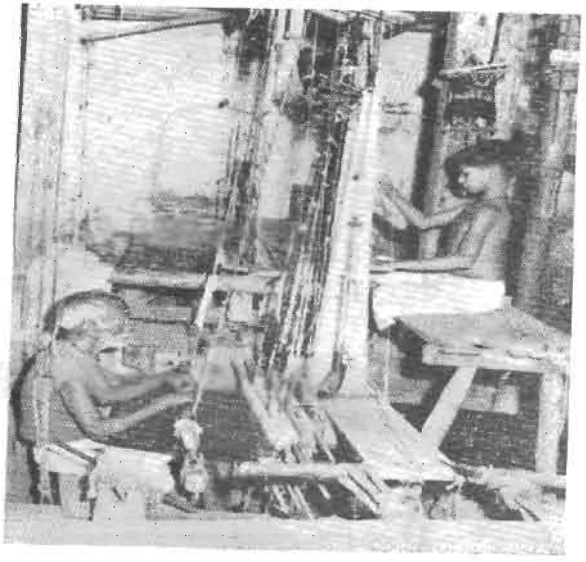

The weaver at his
pit-loom and
the helper boy



Twisting (attaching)
the new warp
with the old one

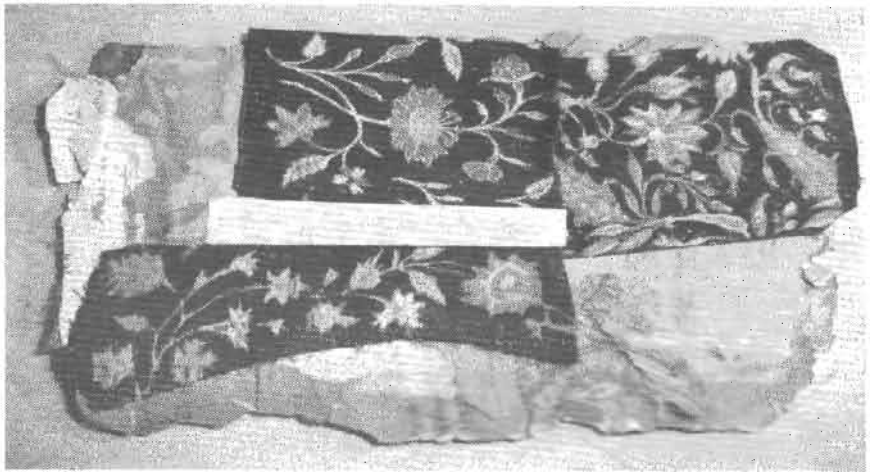

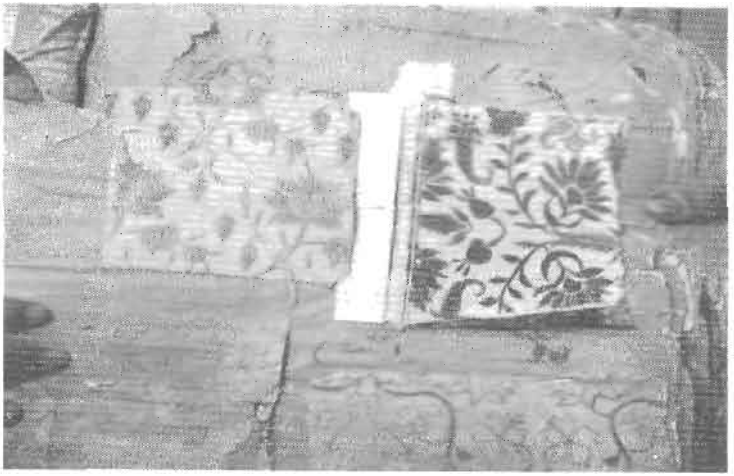

OLD DESIGNS



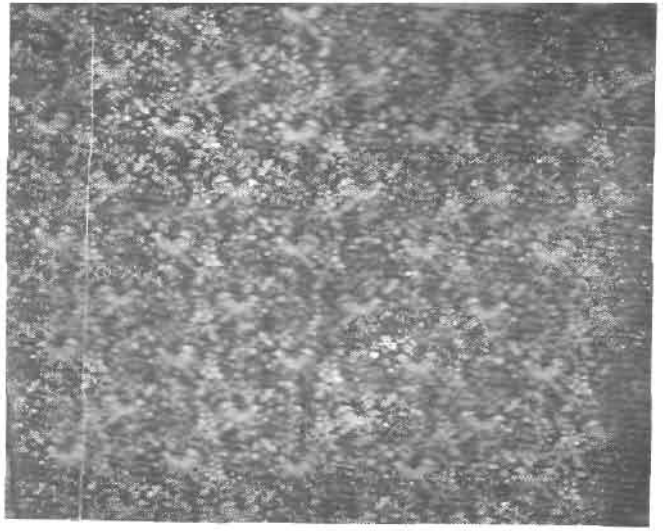

(1)

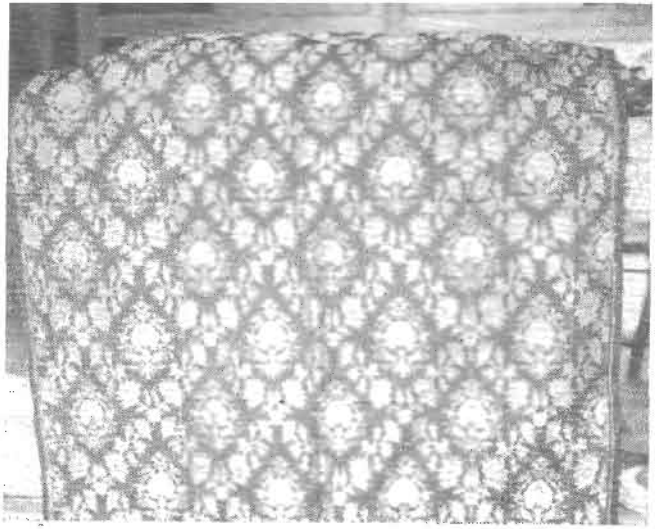

(2)

(1) Double-Bird
(2) " Guldasta "
(3) " Taj-Mahal "
(4) " Kairi " (Mango)
(5) " Kashti " (Boat-like)

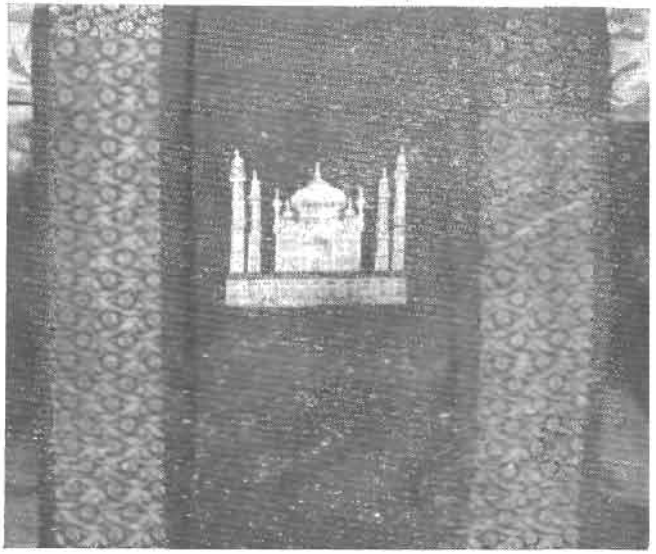

(3)

NEW DESIGNS

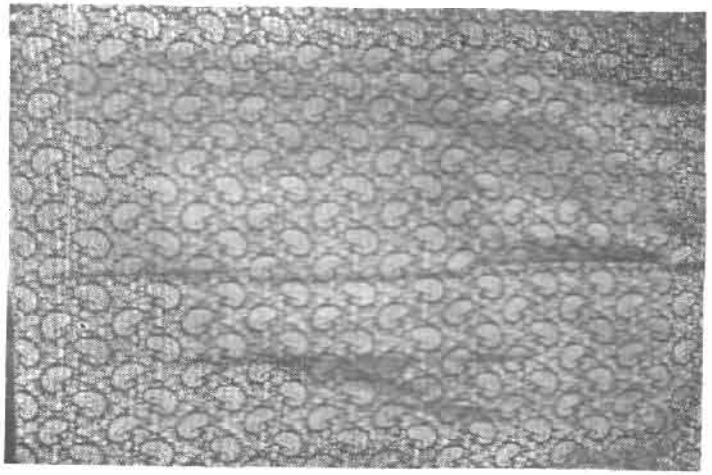

(4)

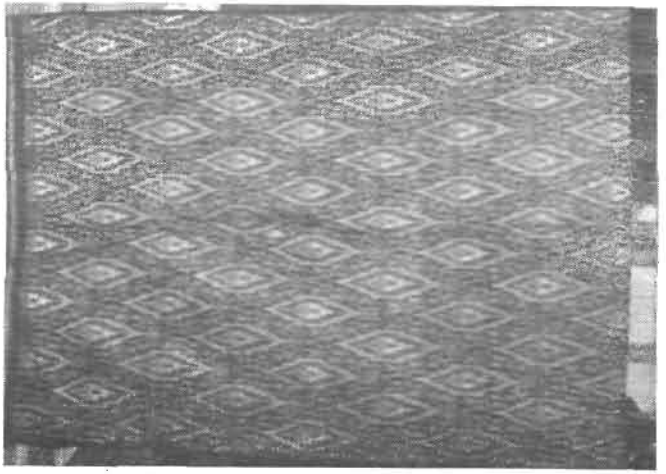

(5)



The weft yarn on Parti is transferred to Kandis or Stalk pieces

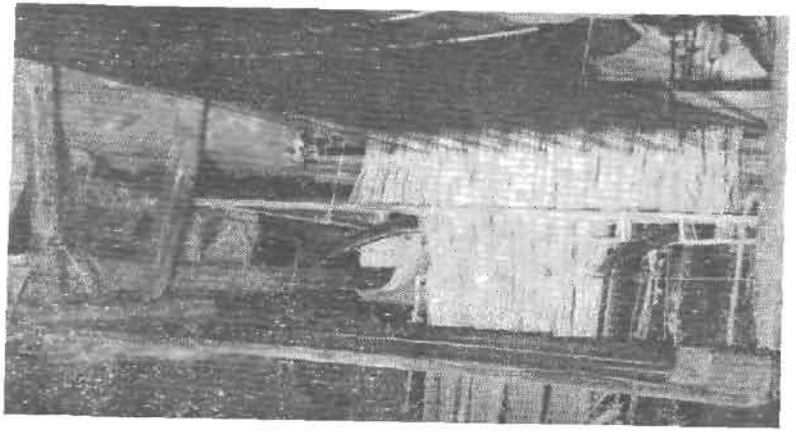

The pit-loom along with the " Jala " (Pressure Harness)



The weft yarn is transferred from " Kupe " to the " Parti "

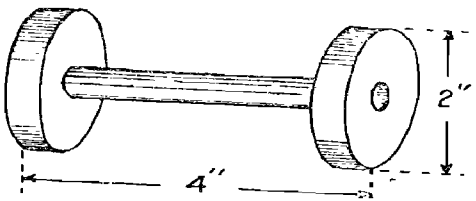

BOBBIN

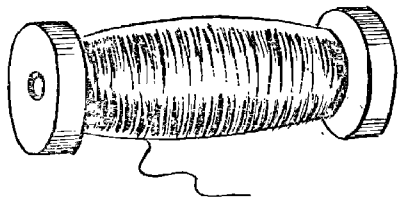

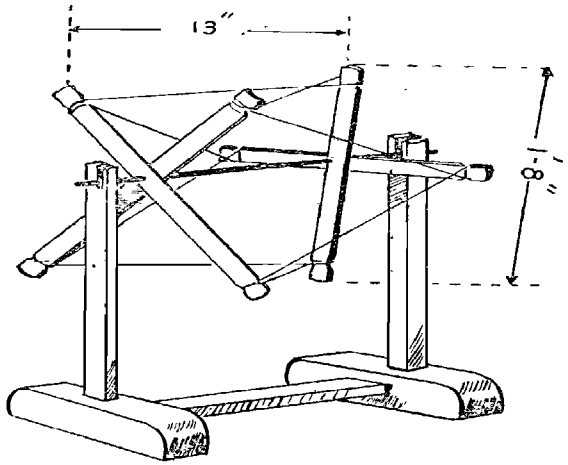

WOODEN STAND

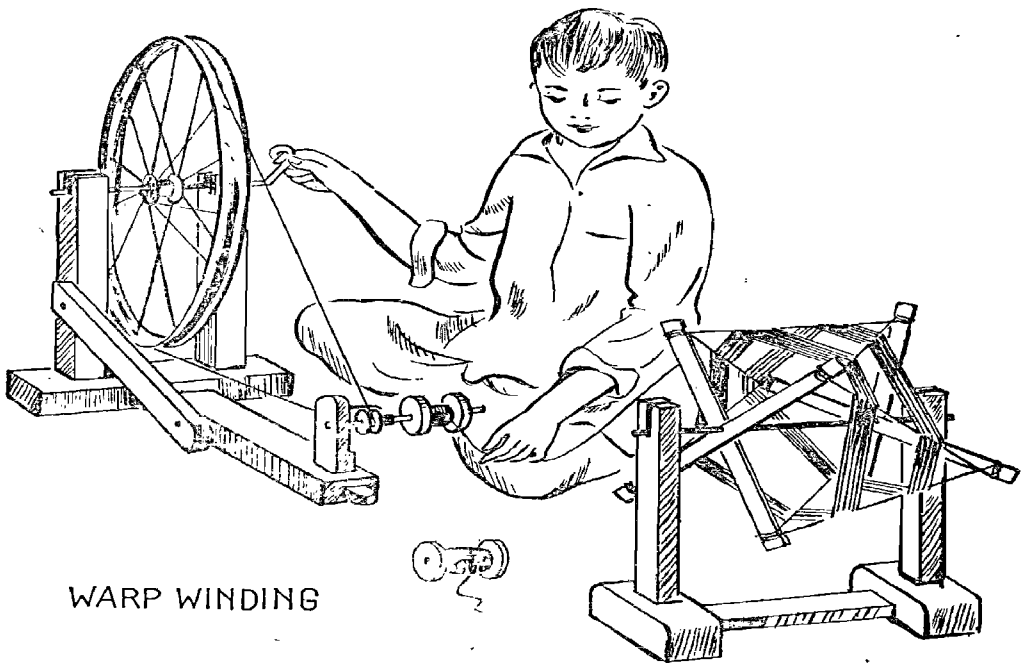

WARP WINDING

Stage II

After the yarn is completely dried it is ready for further processing.

This stage comprises winding of the yarn on bobbins. A 'Warping Charkha' is used for this process. The hanks of warp are deposited over a Bamboo swift kept at the left hand side of the worker. By rotating the wheel of the charkha with the help of the handle attached to it the bobbin deposited on the spindle at the other end of the charkha also gets rotated and the yarn from the bamboo swift gets deposited over the bobbin. The required number of bobbins are thus prepared. In this process of winding care has to be taken to see that individual strands of thread do not get mixed with each other. Many a time the threads get mixed and break while winding. The ends of broken threads are sometimes tied together with a knot and sometimes the broken threads are brought together and twisted to give a continuous thread.

To weave a cloth of 30 yds.×30" width (two colour mango design) 2·6 lbs. warp is necessary. In one day 50 bobbins can be prepared by a person requiring about 1·8 lbs. warp yarn. The warp required for weaving cloth 30 yds.×30" thus requires 1½ man-days to get it on to bobbins.

Stage III

When the required number of bobbins are ready, they are fixed on a wooden frame. The wooden frame is quite simple to look at. It has four wooden plates and is rectangular in shape. Inside the frame, steel rods are fixed vertically and horizontally providing a separate compartment for each bobbin. It has 10 rows and in each row five bobbins can be fixed (as shown in the sketch in the next column). In this way at a time fifty bobbins can be fixed in the frame.

Two iron rods, out of which one is ultimately fixed in the slit of the warper's beam, are fixed into the ground 30 yards apart or less, depending upon the length of the cloth to be woven. Fifty ends of threads (one from each bobbin) are pulled out and are tied to the first rod. The wooden frame containing the bobbins is then moved round the two rods thus releasing the warp threads from the bobbins and transferring them on to the rods. At suitable intervals, between the two rods, Bamboo chips (lease-rods) are planted to keep the warp threads, passed on to the rods, in position.

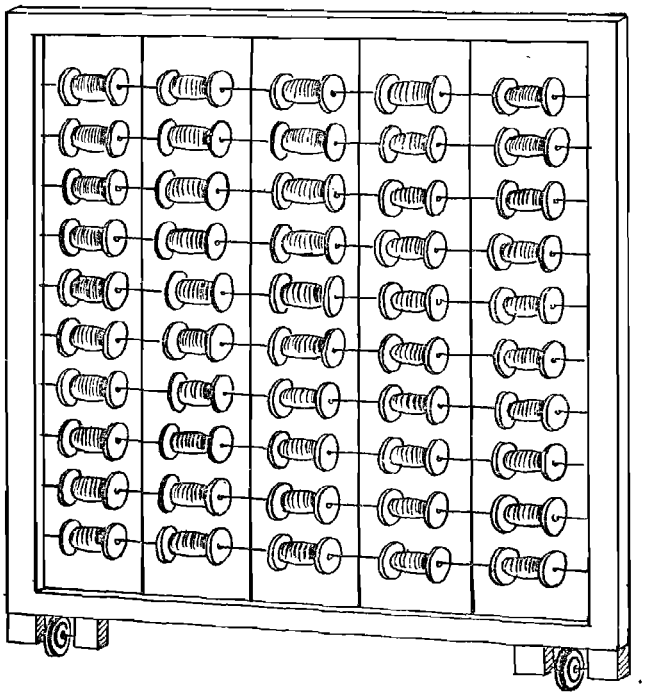

FRAME

After the required quantity of warp has been passed on to the rods they are uprooted from the ground and one of the rods is fitted into the slit of the warper's beam and the warp threads are wound on it and the other rod is removed. The warp threads are then passed through the 'Jala'.

Stage IV (Heddle Knitting)

The warp threads are then passed through the heddles. For production of Himroo cloth the minimum number of heddles required is four. Each thread of the warp is passed through the loops in the heddle. Generally the first thread of the warp is passed through the first heddle, the second through the second heddle and so on. The process continues in sequence till all the threads are exhausted. The function of heddles in weaving is important. After passing the warp thread through the heddles they are passed on through the reed, which is called denting. While passing the threads through the reed care has to be taken to see

that they are passed through it in the same sequence in which they are passed through the loops of the heddles. In case this care is not taken there is every possibility of proper shed, passage for the shuttle to travel, being not obtained. The passage of the threads through heddles and reed from one end to the other checks and avoids mixing of threads.

In 'denting' process the warp threads are passed through the reed. For this two persons are required. One to pick up the threads in succession and pass them through the reed and the other to pull them towards the weaver's beam with the help of a hook.

The ends of all the warp threads thus passed through the reed are then rolled over the beam to give a taut surface before the weaving is started. It is essential that all the threads should have uniform tension and lease-rods are, therefore, inserted in the warp at intervals to avoid inter-mixing of threads.

Preparation of 'Jala' and setting it on the loom is a complicated and time consuming process and hence once the 'Jala' is set it is not removed till the whole length of the required type of cloth is woven. If other particulars are identical, *viz.*, number of picks, width of woven cloth, etc., then weaving a fresh piece of this new cloth is easy. All that is required to be done, is to join the ends of the exhausted warp threads with those of the new one. As described earlier the warp is rolled over the warp beam. Each end of the new warp is taken and is joined to the end of the old warp by giving a twist, or tied. The process continues till all the warp ends are exhausted, the process being called 'Twisting or attaching process'. The threads so joined are pulled through the loops of *naka dori* of the 'Jala', the heddles and finally through the *phani* (reed). For a warp of 30 yds. × 30" one weaver requires on an average, one to one and a half days to complete this process. The process is visible in the photograph on page 13.

If the design changes, the 'Jala' is to be reset as per design to be woven.

Stage V (Weft preparation)

The weft used is cotton weft of 20s and Art Silk of 150d. The quantity required to weave 30 yds. × 30" cloth are :—

Cotton weft of 20s	...	...	4½ lbs.
Art Silk of 150d	...	...	1¾ lbs.

This has to be dyed as explained under Stage I of the manufacturing process. After the yarn is dyed, the hanks are adjusted on wooden swift (*kupe*) and the yarn is taken on to a *parti*. The *kupe* is a wooden rod which is fixed in a stone stand. Three *kupes* are adjusted in a triangular form and weft yarn hanks are fixed over them. The *parti* has a long wooden rod which can be rotated by hand. Around the rod, bamboo strips are fixed so as to give a curved shape. As the rod is rotated, the *parti* gets rotated and the weft on the *kupe* which is kept at the left of the worker gets deposited over the *parti*.

The next process is that of transferring the weft yarn from the *parti* to the stalk piece (*kandi*) which, when "filled" with weft yarn, is fixed in the inner portion of the *katla* (shuttle). The weft yarn is wound over the *kandi* with the help of the 'Winding Charkha'. The required number of *kandis* of cotton and Art Silk yarn are prepared.

This process requires on an average five man-days to complete the work of 30 yards.

The sketch on page 20 shows the transferring of the weft yarn from the *parti* on to the *kandi*.

Stage VI (Weaving)

Now our warp stands stretched on the loom and weft *kandis* (stalk pieces) are ready. The last process is that of weaving. The weaving comprises interlacing the weft yarn with the warp yarns at right angle.

Weaving consists of three stages :—

(1) Forming of sheds by lifting *Jala doris* and heddles ;

(2) Throwing shuttles across through these sheds; and

(3) Beating the filled-in weft yarn into position with the reed.

The working of each operation is described below in brief :—

By lifting the *Jala doris* the required shed is formed for the design to take shape on the cloth. By movement of pedals at the feet of the weaver the particular heddle and the warp threads passing through it are lifted up. The threads attached to other heddles remain stationary.

Two persons are required in weaving of Himroo cloth, one to do the weaving and another, a helper boy (locally called ' Dore-Uthanewala '), who sits on a bench above the loom, close to the *jala*, to lift up the *jala* threads as and when required, to obtain the shed on the warp sheet.

The process of weaving starts with the lifting of the required set of *Jala* threads with the help of *ambuda* along with the *paga doris* which hold the loops through which the warp threads are passed. This results also in the lifting of the warp threads attached to the *paga doris* concerned thereby forming cavities or boxes in *paga doris* and *akodas* are inserted at the two ends to maintain the boxes. Simultaneously with the forming of boxes in the *paga doris* a shed is formed in the warp threads through which the weaver throws the shuttle of the coloured yarn of required tinge. When the required number of shuttles are thus thrown by the weaver as above, the *akoda* and *ambuda* are removed and the weaver beats the woven weft threads into position with the reed.

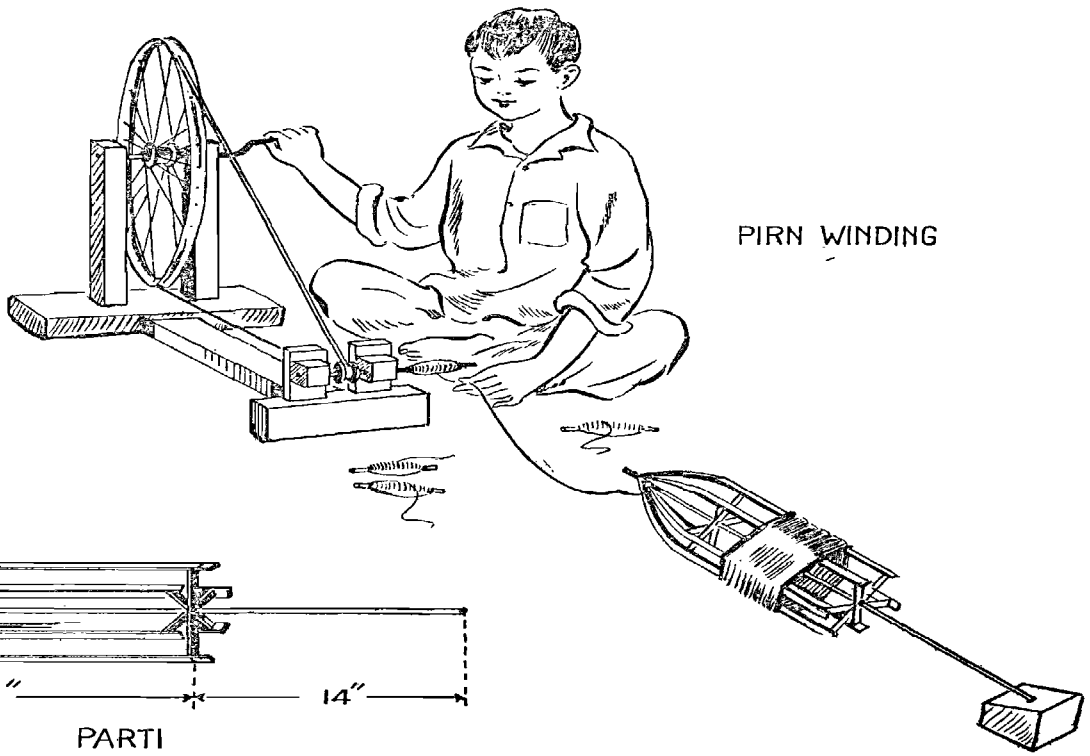

PARTI

The weaver then presses one of the pedals at his feet thus lifting the heddle attached thereto thereby forming a different shed in the warp on the loom, through which he plies shuttle of black yarn for the required number of times depending upon the design of the cloth and beats the weft thread so woven into position with the help of the reed. The helper boy then lifts up another set of threads in the *jala* inserting *akoda*, as in the earlier case, the weaver playing his own part with the desired shuttles. Then follows the releasing of the *jala* by the helper boy and lifting of the heddle by the weaver and plying of black yarn shuttle which process is repeated in a given sequence depending upon the design till the complete length of the cloth is woven.

To manufacture the cloth (two-colour Mango Design) of 30 yds. ×30", on an average about 40 man-days are required. The photo on page 13 shows the weaving in progress.

The method of pit loom weaving which is in vogue here is very old one. The reed has no boxes at either ends and the shuttle thrown at one end is received at the other by the weaver. The weaver has under this method to be very alert as his two hands are doing two different jobs one after the other. His feet, too, are engaged in the formation of the main shed of the warp. The other major defect of using throw shuttle is that a cloth of larger width cannot be produced.

Though the pit loom has thus some disadvantages it has also some advantages. By the use of throw shuttle loom the weaver can produce a design having number of colours : the introduction of Fly Shuttle loom will restrict the number of colours to only two as it has provision of only two boxes, one at either end, where the shuttles can rest and so the manufacturers are reported not to have introduced the Fly Shuttle looms here.

Articles and Designs

Articles produced in this craft are mostly shawls. Shawls in following sizes are produced :—

(*i*) 2 yards × 45"
(*ii*) 2 yards × 30"
(*iii*) 2 yards × 22"

The shawls in common use are of size 2 yds. × 30". Besides being used as shawls Himroo fabrics are also used for door and window curtains, tapestry, pillow covers, skirts, dressing gowns, blouse pieces, ladies' money purses and neck-ties. The demand for Himroo cloth has of late reduced partly due to its comparative higher cost as compared to cloth of the same type produced on powerlooms and partly due to change of tastes among the people.

As already seen Himroo cloth consists of basic designs in Art Silk on the background of cotton material. The craftsmen concerned have, however, lost much of their interest in devising new designs and mostly produce cloth of stereotype designs.

The various designs in vogue at present are :—

(*i*) *Plain Designs.*—These are composed of plain lines, parallel lines, diagonal lines, and lines intersecting each other. Plain designs are not in demand nowadays and are not now adopted in the manufacturing process.

(*ii*) *The Geometrical Designs.*—These consist of circles, diamonds, hexagons, octagons, ovals and ellipses. The 'Kashti' design showing the birds' eye view of a country craft, and 'Karanphul' are examples of this design.

(*iii*) *Design from nature.*—Most important among these are designs of fruits like pine-apples, pomegranates, the almond and the mango. The 'Mango', 'Anarkali' (pomegranate bud) and 'Diamond Mango' designs are the typical illustrations of this category.

(*iv*) *Designs of Flowers.*—The flowers such as jasmin, the rose, the lily and the lotus also form subjects of designs. The 'Chameli'-design depicting the Jasmine flower 'Kashmiri' design and 'Guldasta' design go to illustrate these designs.

(*v*) *Designs of Flowering Creepers.*—In these designs flowering creepers with leaves and stems interlinking one another to form a running design diagonally, parallelly and vertically are woven. The 'Shamina' design, the 'Banarasi' design, the 'Ahmadabadi' design, the 'Ajanta' design, the 'Akbari' design (named after its designer) are the illustrations of this type.

(*vi*) *Designs of Birds and Animals.*—Birds and animals also form subjects of design of which the major illustrations are provided by the 'Elephant', the 'Square-bird', the 'Modern bird' and the 'Double-bird' designs.

Religion also did not escape the artistic eye of the designers and the oft quoted verses from Koran were also woven in letters of gold, as also the portraits of ancient monarchs and the Hindu Gods and deities.

On the whole the designs are of a stereotype nature without much of modernity and variety displayed therein. This is primarily due to lack of any incentive or research in this regard.

The photographs of some of the most popular ancient designs in Himroo fabrics are given on page 14. As regards the names of these designs nobody could say anything authoritatively.

The retail prices of Himroo Shawls of some of the popular designs are given in Appendix 3.

CHAPTER IV

CRAFTSMEN FAMILIES

The 'Himroo Weaving' craft at Aurangabad is at present exclusively in the hands of Muslims. All the weavers and proprietors are Muslims and are pursuing the craft since generations. It is mentioned in the *the District Gazetteer* (1884) that some Bohra and Khatri artisans were also engaged in this craft, but on enquiry it was found that they all have left it and have taken to other means of livelihood. The artisans of the Muslim community only are now left in the craft and no person from any other caste or community was reported. Moreover, many traditional Himroo weavers are reported to have left the craft and switched over to other professions. During the survey, in all, 120 families were found pursuing this craft.

The craft provides gainful employment to 184 persons, out of whom 18 are engaged in management, 8 as proprietors and 10 as their assistants. Of the remaining 166 workers 111 or about 60·33 per cent of total workers were found engaged in the co-operative fold and the rest in proprietary concerns. The Co-operative Societies are thus playing a major role in providing employment to workers in this craft.

The population engaged in the craft can be divided into the following major groups :—

(1) *Employers.*—This group comprises 8 persons who have establishments of their own where the manufacture of Himroo cloth and its allied processes take place. They do not take any active part in the production process but only supervise the work of their employees.

(2) *Employees.*—This group comprises 176 workers, of whom 10 work as assistants of their masters, 90 work as weavers and the rest as helper boys. The assistants help their masters in supervision, maintaining accounts, etc. and do not take any active part in the production process. The weavers work to the orders of their masters on piece wage basis and the helper boys are employed on monthly wages. Most of the workers are from the traditional craftsmen families who are pursuing this craft since generations. They do not have workshops of their own but go for work to their master's workshop. They commence work generally at 9 o'clock in the morning. No female workers are employed in the craft. This is because of traditional or social customs prevailing in the Muslim community where the womenfolk generally observe '*purdah*'. It was observed that in recent past no new families have taken up this craft.

Another significant feature of the craft is employment of child labour. The helper boys employed to assist the weavers are generally children below the age of 15. Out of the 166 workers engaged in the craft as many as 76 or about 46 per cent are children below the age of 15. Generally every loom requires one helper boy to assist the weaver. One benefit of this employment of child labour is that the proprietors are not required to recruit trainees to work in the craft. The helper boys, while assisting the weavers, learn the art of weaving by observation and practise it within a few years. This maintains the flow of new entrants in the craft. It may be because of this recruitment of child labour that the proprietors are not facing much difficulty in obtaining skilled labour to run the looms.

Forty-seven weavers' families were contacted to ascertain their socio-economic condition. From amongst these 47 families, 52 persons and three boys were found to be engaged in this craft as weavers and helper boys, respectively. Their sectwise distribution in the craft was as under :—

Name of the Sect		No. of families	Percentage
(1) Sheikh	...	32	68·09
(2) Pathan	...	11	23·40
(3) Syed	...	4	8·51
Total	...	47	100·00

It is evident from the above table that 32 out of 47, or 68·09 per cent families belonged to Sheikh sect of Muslims, 11 or 23·40 per cent to Pathan sect and 4 or 8·51 per cent to Syed sect. It shows the domination of the Sheikhs in the craft. Out of the 47 families, as many as 25 or 53·19 per cent families were found to be traditional craftsmen families pursuing the craft since generations. Ten families (21·28 per cent) were formerly in Government service, 4 families (8·51 per cent) were in trade and 8 families (17·02 per cent)

were engaged in miscellaneous activities. One more point worth noting is that the present weavers are not favourably inclined towards keeping their sons in this craft. Out of the 47 families contacted only three have engaged their sons in this craft as helper boys. This is because of the availability of other more attractive occupations where they could earn better wages than in the Himroo craft.

Two co-operative societies and a proprietary establishment have showrooms of their own where sales of Himroo cloth to the customers take place. They also undertake orders from outside merchants and the goods are supplied to them by Post Parcel.

At the time of survey there were no male unemployed members in the weavers' families. This is due to availability of other skilled and unskilled jobs in the town.

No union or association exists in the craft where the workers can discuss their problems.

Following are the details about the educational level, agewise distribution, etc., of the workers engaged in the craft :—

Education.—Educational data in respect of these 47 families revealed that of 52 weavers, only 16 or 30·77 per cent, were literate and the rest illiterate as shown below :—

Educational level	Number of weavers	Percentage
TOTAL	52	100·00
Illiterate	36	69·23
Literate	16	30·77
(*i*) Without Educational level.	8	15·39
(*ii*) Primary or Junior Basic	7	13·46
(*iii*) Middle ...	1	1·92

The literates, it was learnt, are not attracted towards the craft due to availability of other occupations where they can get higher remuneration.

Age.—About 48·08 per cent of the weavers in the above 47 families belong to the age-group 15—34 years. They are thus of fairly mature age at which one is expected to give maximum output. The agewise break-up of the above weavers is given below :—

Age-group	Number of weavers	Percentage
TOTAL	52	100·00
0—14	...	...
15—34	25	48·08
35—59	22	42·31
60 and above	5	9·61

The above table will show that majority of the weavers are in the age-groups 15—34 and 35—59 and none in the age-group 0—14. Persons in the latter age-group are employed in the craft on monthly wages as helper boys as already seen.

Economic condition of workers

All the earners in the 47 families are males. 20 (or 42·55 per cent) of these families had other sources of income besides Himroo manufacture. The following table gives the distribution of the 47 families in three different groups.

The first group comprises families whose only source of income is manufacture of Himroo cloth. The second group consists of families whose principal source of income is manufacture of Himroo cloth but who have also another subsidiary occupation. The last group includes those families whose main source of income is other than the manufacture of Himroo cloth.

Description	Number of families	Percentage
TOTAL	47	100·00
(*i*) Families having Himroo manufacture as their only source of income.	27	57·45
(*ii*) Families having Himroo manufacture as their principal source of income but having some other subsidiary occupation.	18	38·30
(*iii*) Families having Himroo manufacture as their subsidiary occupation and main occupation other than Himroo manufacture.	2	4·25

The other sources of income comprised house rent, pension, trading in fruits, work in silk mill, cleaning motor cars, work as miscellaneous labourer, etc.

The number of earners in these 47 families were as under :—

Families with	Number of families	Total earners	Percentage of total No. of families
TOTAL ..	47	79	100·00
One Earner ..	26	26	55·32
Two Earners ..	12	24	25·53
Three Earners ..	7	21	14·89
Four Earners ..	2	8	4·26

There were, thus, 79 earners among them. Majority of the families, *viz.*, 26 (or 55·32 per cent) have only

one earning member. There were 79 earners in the 47 families surveyed, out of which 55 were engaged in Himroo weaving and the rest, i.e., 24 in other occupations. The details are as follows :—

Particulars	*Number*
(1) Assistant in retail trade in grocery	1
(2) Assistant in watch repairing shop	1
(3) Retail trade in fruits and vegetables	3
(4) Workers in Silk Mill	6
(5) Clerk in Forest Department	1
(6) Hotel boys	2
(7) Assistant in Tailoring shop	1
(8) Retail trade in bread, etc.	1
(9) Bidi-maker	1
(10) Worker in Dal factory	1
(11) Motor cleaner	1
(12) Worker in Trunk Factory	1
(13) Miscellaneous labourer	4
Total ..	24

The average size of the family was found to be 4·53 persons per family. The earnings of a weaver engaged in Himroo Weaving craft are in the range of Rs. 60 to Rs. 75 per month. As the majority of the families have only one earning member the family income comes to Rs. 60 to Rs. 75 per month which is too low for the maintenance of a family.

The economic condition of the families can also be judged from the number of dependants per earner. The following table gives this information :—

Range of dependants per earner	No. of families	Percentage
TOTAL ..	47	100·00
Nil ..	4	8·51
0—1 ..	6	12·76
1—2 ..	14	29·79
2—3 ..	7	14·89
3—4 ..	10	21·28
4—5 ..	5	10·64
5—6 ..	1	2·13

It is seen that only 4 or 8·51 per cent of the families have no dependants and only 6 or 12·76 per cent families have dependants per earning member in the range 0—1. The majority of the families have dependants in the range 1—2 and 3—4. By calculation it is seen that average number of dependants per earning member comes to 1·63. This burden of dependency seems to be high when the average earnings of the family are taken into consideration.

Migration

No migration of workers for employment in the craft was noticed. The persons engaged in the craft are the natives of Aurangabad town only.

Master Craftsmen

Master Craftsmen in the craft are those who prepare the ' Jala ' from the drawing drawn on a piece of paper and set it on the loom. Judged by this standard, the following persons working in this craft can be spoken of as master craftsmen :—

(1) Md. Abdulla Md. Azam.

(2) Sk. Mannu Chowdhary.

(3) Md. Hanif.

Serial Nos. 2 and 3 are employees of the two Co-operative Societies functioning at Aurangabad. The master craftsman at Serial No. 2 also keeps a Himroo weaving establishment housed in his own workshop where he gets the work done by hiring labour. Serial No. 1 keeps an establishment of his own. The master craftsmen are employed by the societies on contract basis, their wages being 6 per cent of the cost of yarn. Their job is to supervise the working, guide the weaver and prepare ' Jala ' when necessary. They are known as ' Designers '.

They have not received any specialised training but have acquired the skill by observation and actual work.

The family history of each master craftsman in brief, is given below :—

(1) *Md. Abdulla Md. Azam.*—He has an establishment of his own in Nawabpura area where he employs labour and gets the work done through them. He is 49 years old and is educated up to VII Std. His father, too, had his own establishment and was engaged in Himroo weaving only. The art has passed on to Md. Abdulla from his father. He did not engage himself in any other occupation but is pursuing the craft since his childhood. He can prepare ' Jala ' from any design given to him. He has a good collection of samples of Himroo cloth produced by him in his own workshop. He has been awarded many prizes for his workmanship, chief amongst which are the following :—

(1) A prize was awarded to him in Mysore Dasara Exhibition in 1952.

(2) Two prizes were awarded to him in the All India Industrial Exhibition in the years 1949-50 and 1960.

(2) *Sk. Mannu Chowdhary.*—Sk. Mannu, son of Sk. Mohmadsaheb Chowdhary, is 42 years old and is a native of Aurangabad. He has an establishment of his own at his residence in Jinsipura area where he has installed two looms on which he has employed weavers on piece-wage basis. He is also an employee of the Himroo and Nawabpura Industrial Co-operative Society, Aurangabad, where he works as a designer on commission basis. His father was engaged in cloth trade but his uncle was engaged in the manufacture of Himroo cloth. The art of weaving has passed on to him from his uncle.

(3) *Md. Hanif, son of Sk. Ahmed.*—He is 77 years old and works as a weaver with the Himroo Kinkhab Weavers' Co-operative Society, Aurangabad. He does not have any establishment of his own. His father was a Himroo weaver and Md. Hanif has learned the art from him.

Wages

The workers are generally engaged on piece-wages. The practice of employing labour on monthly wages is adopted only in the case of helper boys and the managerial staff.

The average earnings of a weaver per day come to about Rs. 2. In the case of helper boys the average wage per day varies from Re. 0·50 to Re. 0·60. These are the rates paid by the co-operative societies. The weavers and helper boys working outside the co-operative fold also get approximately the same wages per day. The rates of wages of the weavers differ from design to design depending upon the colours involved. The cost of the raw material and the total wages (and average wages) paid to the weavers and the helper boys by the Himroo and Nawabpura Industrial Co-operative Society are given in the table below.

The total wages paid by the Himroo handloom sector at Aurangabad during the year 1960-61 are estimated at Rs. 35,776. This includes actual payments made towards wages, salaries and supervisory charges but does not include the wage of unpaid family workers and proprietors. The details of wages, salaries and supervisory charges paid in 1960-61 are given below :—

Particulars	Co-operative Societies	Association	Proprietory Establishments	Total
	Rs.	Rs.	Rs.	Rs.
Wages ..	14,694	1,273	9,028	24,995
Salaries ..	7,013	....	2,468	9,481
Supervisory charges	1,300	....	....	1,300
Total ..	23,007	1,273	11,496	35,776

The above table reveals that wages amounting to Rs. 24,995 were paid to the craftsmen during the year, which represents 69·9 per cent of total expenditure on labour. The wages are paid on piece-work basis. Salaries include payments made to employees working on monthly basis and performing the job of supervision, maintenance of accounts and also payments made to children working as helper boys who, too, are paid on monthly basis.

The weavers are generally paid every week on Saturdays, for the work done during the week. The weavers draw money in advance, if necessary, which is adjusted towards the wages at the ensuing payment.

The wages, salaries and supervisory charges paid by the Himroo handloom sector in 1961-62 are given below*:—

	Co-operative Societies	Association	Proprietory establishments	Total
	Rs.	Rs.	Rs.	Rs.
Wages ..	26,777	1,733	22,590	51,100
Salaries ..	4,882	400	1,200	6,482
Supervisory charges	2,700	....	....	2,700
Total ..	34,359	2,133	23,790	60,282

*Page 19, Draft Report on "The Himroo Weaving Craft of Aurangabad (Maharashtra)" prepared by the Planning and Research Section (1963) of All India Handicrafts Board, Ministry of Commerce and Industry, Government of India.

The payment on account of wages and supervisory charges have more than doubled during one year from 1960-61 to 1961-62.

Cost of raw material and wages paid by the Himroo and Nawabpura Industrial Co-operative Society

Type of cloth	Cost of raw material per piece	Wages (per piece)			Time taken for production	Average daily wages	
		Weaver	Helper boy	Total		Weaver	Helper boy
1	2	3	4	5	6	7	8
	Rs.	Rs.	Rs.	Rs.	Days	Rs. (Approx.)	Rs. (Approx.)
Shawl of size 30" × 2 yds.—							
One-colour shawl ..	3·50	5·00	1·50	6·50	2·5	2·00	0·60
Two-colour shawl ..	4·00	6·00	1·50	7·50	2·5 to 3·0	2·00	0·50
Three-colour shawl ..	4·50	6·00 to 6·50	2·00	8·00 to 8·50	3 to 4	2·00	0·50

CHAPTER V

STRUCTURE OF HIMROO CRAFT

The establishments engaged in the production of Himroo cloth fall into two groups according to the ownership pattern, *viz.*—

(1) Co-operative Societies and the Industrial Association, and

(2) Proprietory establishments.

Co-operative Societies and Industrial Association

As stated earlier two co-operative societies and an industrial association are engaged in the craft. They were registered under the provisions of section 8 of the Hyderabad Co-operative Societies Act, XVI of 1952, in the years 1953, 1955 and 1959, respectively. The organisers of the two co-operative socicties were originally proprietors of individual establishments pursuing the craft since generations. Each society has a Chairman and full-time supervisory staff. The societies produce Himroo shawls in their own workshops by engaging labour on piece-wage basis. They also sell the produce. The establishments in this group play an important role in the structure of Himroo craft at Aurangabad embracing about two-thirds of its economic activities.

There is one more society run on co-operative basis which though not producing Himroo cloth, prepares garments from Himroo cloth and Paithanee, another silk fabric. The description of these societies is given below :—

(1) *Himroo and Nawabpura Industrial Co-operative Society Ltd., Aurangabad*

Initially all the establishments engaged in the production of Himroo cloth were working independently of each other. There was no co-ordination amongst them and they had to face the problems arising out of individualistic ventures. To overcome this handicap a co-operative society was formed on March 13, 1953, on the initiative of Government and it was registered under the provisions of section 8 of the Hyderabad Co-operative Societies Act, XVI of 1952. The society was named, "The Himroo and Nawabpura Industrial Co-operative Society", and its workshop and office including the showroom are situated in Nawabpura locality. The main object of the society was production of Himroo cloth, supply of raw materials, tools and equipments to its members and rendering assistance to the members in marketing their produce.

The society is located in a rented premises and it has 87 members on its roll of whom 5 are sympathisers. There are 20 looms in the society's workshop operated by its members on payment of wages.

The paid-up share capital of the society is Rs. 1,620·23 and it had received financial assistance of Rs. 14,948 from the former Hyderabad State Government as detailed below :—

Purpose	Amount Rs.
Loan by way of financial assistance or working capital ..	12,000
Loan towards share capital ..	450
Grant for purchase of tools and equipment	2,498
Total ..	14,948

Capital Investment.—The fixed investment of the society was Rs. 5,180. This included expenditure on the purchase of tools and implements only. The land and building for the use of the workshop, office and showroom, etc., are hired and no investment has so far been made on these items. The looms and other implements were purchased by the society from the member craftsmen. The details of the tools and implements now owned by the society are given in the table on page 28.

The production and sales of Himroo cloth by the society during the last six years were as follows :—

Year	Production		Sale	
	Quantity Yards	Value Rs.	Quantity Yards	Value Rs.
1955-56 ...	1,906	16,635	1,448	15,572
1956-57 ...	2,064	18,018	1,970	18,772
1957-58 ...	2,513	19,929	2,313	19,712
1958-59 ...	4,114	29,130	3,854	29,523
1959-60 ...	6,357	44,502	5,487	42,451
1960-61 ...	5,288	34,904	5,421	42,412

Number and Value of tools and implements owned by the Himroo and Nawabpura Industrial Co-operative Society Ltd., Aurangabad (1962)

Name of tool/implement	Number	Rate per piece	Value at the time of purchase	Value per piece at the present market rate
1	2	3	4	5
		Rs.	Rs.	Rs.
(1) Looms with all parts, including frame, cloth roller, warp-roller.	20	100·00	2,000·00	150 to 175.
(2) Reed	20	14·00 (English made)	280·00	6·00 (Indian make)
(3) Heddles	20 sets	7·00	140·00	Not available.
(4) Helper's seat	20	15·00	300·00	20 to 25
(5) Throw shuttles	80	1·50	120·00	2·50 to 3·00
(6) Supporting poles	160	8·00	1,280·00	....
(7) Net (Jala)	100	7·00	700·00	25·00
(8) Wooden ploughs	40	2·50	100·00	2·50 to 3·00
(9) Wooden net supporter	20	1·50	30·00	2·00
(10) Bamboo pedals	80	0·75	60·00	1·00
(11) Lever Bamboo	80	0·75	60·00	1·00
(12) Warp bobbins	140	0·29	40·00	0·31
(13) Weft bobbins (Stalk pieces)	....	....	....	....
(14) Winding Charkha	3	20·00	60·00	30·00
(15) Warping Charkha	1	10·00	10·00	15·00
		Total ..	5,180·00	

(2) *The Himroo Kinkhab Weavers' Co-operative Society*

The satisfactory working of the Himroo and Nawabpura Industrial Co-operative Society Ltd., Aurangabad, led more artisans to come forward to establish one more society. Accordingly this society was formed and registered under the provisions of section 8 of the Hyderabad Co-operative Societies Act, XVI of 1952, on 27th August 1955. The society was named as "The Himroo Kinkhab Weavers' Co-operative Society" and its workshop, office and showroom are all located in one building in Nawabpura area.

The society was formed with the same object as that of the earlier society, *viz.*, production of Himroo cloth, supply of raw materials, tools and equipments to the members and assistance to them in marketing their produce.

On the day of survey the society had 26 members and its paid-up share capital was Rs. 2,956. The society had received assistance from the former Hyderabad State amounting to Rs. 15,550 as detailed below :—

Purpose	Amount
	Rs.
Loan as financial assistance or working capital	12,000
Loan towards share capital ..	450
Grant for purchase of tools and implements ..	2,500
Grant towards management ..	600
Total ..	15,550

The production and sales of Himroo cloth by this society during the last six years were as follows *:—

Year	Production		Sale	
	Quantity	Value	Quantity	Value
	Yards	Rs.	Yards	Rs.
1956-57 ...	2,801	24,491	2,479	22,233
1957-58 ...	2,080	19,187	2,498	23,096
1958-59 ...	1,991	18,034	1,854	16,877
1959-60 ...	1,929	18,022	2,034	19,079
1960-61 ...	2,282	22,834	1,978	16,478

**Source*.—Office Records of the Himroo Kinkhab Weavers' Co-operative Society Ltd., Aurangabad.

(3) *The Aurangabad District Industrial Co-operative Association Ltd., Aurangabad*

This Association was also registered under the provisions of section 8 of the Hyderabad Co-operative Societies Act, XVI of 1952, on 9th February 1959, with 79 shareholders and share capital of Rs. 7,230. The Association has a Board of Directors consisting of 15 persons. The Association has various schemes before it. They comprise manufacture of Khadi Himroo shawls, operating of an oil ghani, opening of a Khadi Bhandar,

manufacture of non-edible oils, establishment of godowns, purchase of building materials, tools and equipments and various other items. The Association has undertaken the production of Himroo shawls in pure Khadi as one of their schemes. The raw material is supplied to the individual craftsmen who work in their own workshops and have establishments of their own ; and the work is got done from them by paying wages to them on piece-wage basis. A grant of Rs. 16,032 was sanctioned to the Association by Government for production of Himroo shawls in Khadi.

The production and sales of Himroo shawls by the Association since its establishment were as under :—

Year	Production		Sale	
	Quantity	Value	Quantity	Value
	Yards	Rs.	Yards	Rs.
1959-60 ...	174¾	2,811	173¾	2,796
1960-61 ...	180	3,021	180	3,021

The shawls are produced in different designs

The designwise production and sales of Himroo shawls in Khadi by the Association during the year 1960-61 were as under :—

Name of Design		Quantity	Value
		Yards	Rs.
(1) Bareek Bail	...	16	385
(2) Teen Batti Bail	...	14	211
(3) Big Mango	...	16	246
(4) Ahmedabad Bail	...	18	383
(5) Bareek Bail	...	18	270
(6) Kagdi Jal	...	26	345
(7) Guldasta	...	10	165
(8) Mango Design	...	14	227
(9) Ahmedabadi Bail	...	18	299
(10) Akbari Bail	...	30	490
Total	...	180	3,021

(4) *National Dresses Tailoring Industries Society, Aurangabad*

There is one more society which is also playing an important role in providing Himroo pieces in various designs and articles of Himroo to the customers. This society has started functioning on 27th April 1961 and is registered under the provisions of section 8 of the Hyderabad Co-operative Societies Act, XVI of 1952, and is named " National Dresses Tailoring Industries Society, Aurangabad ". The total number of members of the society is 14, out of whom 7 are working with the society. The society has a share capital of Rs. 600. Its main object is the manufacture of ready-made garments, such as bush shirts, achkans, blouses, ladies' purses, neck-ties and other utility articles using Himroo fabric and Paithanee. A special type of Himroo cloth is obtained by the society by placing orders with societies engaged in the manufacture of Himroo cloth. The cloth is purchased by the society and is given to the 7 working members who have sewing machines of their own. They prepare different garments as per the requirements of the society and make them over to it. They receive wages from the society on piece-wage basis for their work. The sale of the products is the responsibility of the society. The articles are sold both in the local market and at different emporia at Bombay, Bangalore, Aurangabad and at various other centres.

Proprietary Establishments

These establishments purchase the required raw material directly from the market and manufacture their own cloth. They engage labour on piece-wages and get the work done in their own workshops. They sell the produce to the traders or consumers directly in the open market. They work on their own account taking all the entrepreneural risks, though sometimes they also accept work on contract basis, in which case the details regarding design, colours, quantum of production, rates and other terms are fixed beforehand. There are five establishments in this category belonging to traditional craftsmen. None of these establishments is registered under the Shops and Establishments, or, the Factories Act.

Every establishment undertakes all the processes involved in the production of Himroo cloth. They have not to depend on others except in one process, *viz.*, dyeing the yarn which they either get done on payment from the two co-operative societies who have arrangements for dyeing, or else they purchase dyed yarn from the market.

The number of establishments of the two categories mentioned at the beginning of the Chapter and the number of looms plied and workers engaged in them on the day of the survey are given in the table on page 30.

In all 84 looms were working on the date of survey, of which 40 were working in co-operative sector and the rest, in private or individual sector.

Number and type of establishments, looms and workers engaged in manufacturing Himroo at Aurangabad (1962)

Type of establishment	Number of Establishments	Number of Looms possessed	Workers engaged as			
			Managerial staff	Weavers	Helper boys	Total
1	2	3	4	5	6	7
(1) Co-operative Establishments/Associations ..	3	40	9	63	48	120
(2) Independent or Proprietary Establishments ..	5	44	9	27	28	64
Total ..	8	84	18	90	76	184

Finance

The main problem which generally faces the small-scale industry is that of finance. So far as proprietary concerns are concerned the fixed and working capital are raised from the owners' resources. As for the co-operative societies they have raised share capital and have also been assisted by Government to the extent of Rs. 46,530 by way of grants and loans, so far. The fixed capital requirement comprises land, buildings, tools, equipments, etc. So far as the proprietary establishments are concerned they have established the concerns in their own buildings. A portion of the dwelling itself is reserved for carrying out the manufacture of Himroo cloth. The two co-operative societies and the Association have hired the buildings where previous proprietors carried their production. The tools and equipments used by the proprietary concerns are those purchased and installed by their forefathers initially. The establishments run on co-operative basis have purchased the tools and equipments from their members as stated earlier and some new purchases also have been made.

Capital Investment

The fixed capital investments for the craft comprises the looms, tools and equipments and land or building. While calculating the fixed capital investment in looms, tools, equipments, etc., the value of the items at the current market price in the condition in which they were initially bought without making any allowance for depreciation, was taken into consideration. In case of land and building their present price is taken into account. In case of establishments where the workshop is in a part of a dwelling the value of that part is taken into account.

Type of establishment	Fixed capital		
	Looms, tools, equipments etc.	Land and buildings	Total
	Rs.	Rs.	Rs.
Co-operative Societies/ Association ..	9,302	50,000	59,302
Proprietary establishments	6,600	51,000	57,600
Total ...	15,902	1,01,000	1,16,902

The above table reveals that the investment in looms, tools and equipments was of the value of Rs. 15,902 whereas that in land and buildings, of Rs. 1,01,000. In the total capital investment the share of the Co-operative Societies/Association and the proprietary concerns is almost equal. The investment works out at about Rs. 14,612 per establishment and Rs. 635 per worker, if the managerial staff is included and Rs. 704, if the managerial staff is excluded.

The fixed capital investment in the craft as calculated by the All India Handicrafts Board for the year 1961-62 was as follows*:—

Type of establishment	Fixed capital		
	Looms, tools and equipments	Land and shed	Total
	Rs.	Rs.	Rs.
Proprietary establishments.	11,070	57,000	68,070
Co-operative Societies/ Association ..	12,025	57,000	69,025
Total ...	23.095	1,14,000	1,37,095

*Page 21, Draft Report on " The Himroo Weaving Craft of Aurangabad (Maharashtra)" prepared by the Planning and Research Section (1963) of All India Handicrafts Board, Ministry of Commerce and Industry, Government of India.

The circulating or working capital is used for the purchase of raw material and for payment of wages to the workers. The total working capital for the year 1960-61 was estimated at about Rs. 57,617 of which the co-operative concerns shared 78·06 per cent and the proprietary concerns, 21·94 per cent. The working capital per establishment comes to Rs. 7,202. The working capital per worker (inclusive of managerial staff) comes to Rs. 313. It comes to Rs. 347 if the managerial staff is excluded. The details are given below :—

Particulars	Proprietary establishments	Co-operative Societies/ Association	Total
	Rs.	Rs.	Rs.
(1) Working Capital ..	12,640 (21·94%)	44,977 (78·06%)	57,617 (100·00%)
(2) Working Capital per worker (excluding managerial staff).	230	405	347
(3) Working Capital per worker (including managerial staff).	197	375	313

The figures of working capital for the year 1961-62 were as under* :—

Particulars	Proprietary establish-ments	Co-operative Societies/ Association	Total
	Rs.	Rs.	Rs.
(1) Working Capital ..	16,900 (27·96%)	43,532 (72·04%)	60,432 (100·00%)
(2) Working Capital per worker (exeluding managerial staff).	213·92	356·82	300·65
(3) Working Capital per worker (including managerial staff).	192·05	332·31	275·95

*Page 22, Draft Report on " The Himroo Weaving Craft of Aurangabad (Maharashtra)" prepared by the Planning and Research Section (1963) of All India Handicrafts Board, Ministry of Commerce and Industry, Government of India.

Government Himroo Training Centre

There are no facilities provided for the training of new entrants in the craft either by the co-operative, or by the proprietary concerns. This matter was under active consideration of Government and an amount of Rs. 30,000 was sanctioned sometime in 1960 for the purpose, but the training centre could not be opened due to some administrative difficulties. The amount was later transferred to the Zilla Parishad, Aurangabad, on its formation.

A training centre known as " Government Himroo Training Centre ", is now opened under the auspices of the Zilla Parishad, Aurangabad, since July, 1963. Fifteen trainees (ten boys and five girls) are recruited for training at the centre. Each trainee is paid a stipend of Rs. 25 per month.

The main object of the institute is to provide training facilities to new entrants in the Himroo handloom weaving. The duration of the training is of one year in which period the knowledge of all the processes connected with the weaving of Himroo cloth is imparted to the trainees. A trainee ought to be between the age of 14 to 25 years and must have passed IV standard. The latter condition is not applicable to persons belonging to traditional craftsmen families. After the completion of the training the trainees are assisted in getting employment or in setting up their own establishment, as desired.

Two full-time instructors are engaged for imparting training. The office and the workshop of the training centre are situated in a rented building in Shahbazar. The institute has 10 pit-looms and 4 Jacquard looms. The total investment in looms, tools and equipments is Rs. 4,737.

During the year 1963-64, 13 trainees completed their training successfully. The total expenditure on the scheme during the year 1963-64 amounted to Rs. 19,276.

CHAPTER VI

ECONOMIC ASPECT

The cost of production of an article is the cost of raw material and labour charges involved, including the cost of transportation of raw material, rent of workshop, rent of tools, unpaid wages to family members, interest on loan, depreciation charges, etc. An attempt is made below to find out the cost of production of Himroo cloth with 'Mango' design :—

Sector	..	Handloom
Item of manufacture	..	Coloured Himroo shawls with black background.
Design	..	Mango.
Dimension of each piece	..	30″ × 72″
Number of picks per inch	..	36 × 2
Number of ends per inch	..	60
Description	..	Count of warp (staple) = 2/60s Count of weft (cotton) = 20s Art Silk = 150 deniers

The cost of production of 13 Himroo shawls each of 30″ × 72″ size is given below :—

Description		Cost	Cost per piece
		Rs.	Rs.
(*a*) *Raw material*—			
(*i*) Staple yarn	..	15·00	1·15
(*ii*) Cotton yarn	..	11·25	0·86
(*iii*) Art silk	..	9·10	0·70
(*iv*) Dyeing material	..	6·08	0·47
			3·18
			22·71%
(*b*) *Wages (Paid and Unpaid)*—			
(*i*) Dyeing	..	1·45	0·11
(*ii*) Warping and Winding	..	9·35	0·72
(*iii*) Twisting	..	3·00	0·23
(*iv*) Weaving charges	..	84·00	6·46
(*v*) Helper's charges	..	9·85	0·75
			8·27
			59·07%
(*c*) Margin (includes light charges, secretary's commission, society's commission, depreciation charges, etc).		33·15	2·55
			2·55
			18·22%
Ex-factory price of one piece	..	....	14·00
			100·00%

In old days, say 1916, the cost of a piece of Himroo cloth of the dimensions of 6 yards × 1 yard or 216″ × 36″ was as under* :—

Description		Amount		
		Rs.	As.	Ps.
(1) Cost of raw silk and dyeing	...	.. 20	4	0
(2) Cotton yarn and dyeing..	...	.. 4	0	0
(3) Weaving charges ...	...	.. 14	0	0
		38	4	0

Source : Page 37, " Risala Darbiyan Sannat aur Hirfat Saudagiri etc., " by Md. Nizamuddin, 1326 F Hyderabad.

Note.—The cost of production given in this book refers to Osmania Sikka currency. The standard exchange rate of O. S. into I. G. currency prevailing was at O.S. Rs. 116-10-4 for I.G. Rs. 100.

If we compare the prices of the Himroo fabrics manufactured today with those manufactured in 1916, we may not find much difference in them. However, it cannot be denied that the quality of the raw material used and the workmanship in the manufacture of Himroo must have much deteriorated since the beginning of this century as the raw material used in manufacture of Himroo in 1916 constituted 66·90 per cent of the total cost whereas today it is only 22·71 per cent of the total cost of production.

Time required to weave a piece of cloth and time consumed for different processes is given in Appendix 1.

The table on the next page gives the details of the cost of production of 24 yards of Himroo cloth woven between the period 22nd June 1959 to 26th July 1959 by Shri Abdul Kadir on loom No. 3 in the " Himroo and Nawabpura Weavers' Industrial Co-operative Society, Aurangabad ".

Details of the Cost of Production of 24 yards of Himroo Cloth in June-July 1959

Job No. 418. Loom No. 3
Name of Weaver : Shri Abdul Kadir. Warp—2/60s
Reed No. 22. Width of warp—32". Cloth width—30"
Length of cloth—30 yds. (Actual length of finished product = 24 yds.)
Design : Two colour Mango design.
Job issue date : 22-6-1959. Closing date : 26-7-1959.

Himroo and Nawabpura Weavers' Industrial Co-operative Society, Aurangabad

Serial No.	Date	Particulars	Quantity		Rate	Unit	Amount
1	2	3	4		5	6	7
			Lbs.	Ozs.	Rs.		Rs.
1	22-6-1959	.. 2/60s staple yarn ..	2	4	6·60	Per lb.	14·83
2	Do.	.. 20s cotton yarn ..	1	8	2·31	Per lb.	3·46
3	Do.	.. 20s cotton yarn ..	2	8	2·39	Per lb.	5·98
4	Do.	.. 120 Art silk coloured ..	2	0	7·36	Per lb.	14·72
			8	4			38·99

MAN-DAYS

		Rs.
*Designing at 6 per cent of the cost of the yarn		2·34
Twisting charges, Nake opening etc. }	Not separately calculated.	
Yarn spreading 4 lb. at 0·37 per lb.		1·48
Silk spreading 2 lb. at 0·62 per lb.		1·24
†Weaver's wages for 24 yards at 2·75 per yard		66·00
‡Helper's wages for 24 yards at 0·75 per yard		18·00
		89·06
Transport charges		1·17
Light charges		1·30
Interest		3·90
Supervising charges		7·80
Society's commission		15·60
¶Amount added to the cost to get the price of an individual piece of Himroo in whole rupees ..		10·18
Total ..		168·00

The cost of production of the 24 yards of cloth thus comes to Rs. 168.

The ex-factory price per yard thus comes to Rs. 7·00.

The job was continued for 35 days by the weaver, Shri Abdul Kadir, who got Rs. 66·00 as his wages. His daily wages thus work out at Rs. 1·88 which is far below the average earning of a factory worker which is Rs. 2 or more depending upon one's skill and capacity.

* The charges for adjusting the warp on the looms as per design are 6 per cent of total cost of the raw material.
† The weaver is paid on the basis of cloth woven in a given period. The wages for weaving one yard of cloth are Rs. 2·75.
‡ The helper boy is paid on monthly basis. In the statement, however, his wages are calculated on "piece wage" basis for the sake of uniformity
¶ The price of a shawl is quoted in round figures and all fractions are rounded off. In order to get a round figure, the additions are made to total cost of production.

Annual production and sale

The annual production and sale of the two Co-operative Societies together is given below :—

Year		Production	Sale
		Rs.	Rs.
1956-57	...	42,508·75	41,005·00
1957-58	...	39,115·96	42,808·00
1958-59	...	47,163·59	46,400·00
1959-60	...	62,524·00	61,530·00
1960-61	...	57,738·00	58,890·00

It is seen from the above figures that production lowered by about 7·98 per cent in 1957-58 as compared to 1956-57. It went on increasing in the succeeding two years. The increase both in production and sale was spectacular in 1959-60. In 1960-61 however both the production and sales dropped by Rs. 4,786, and Rs. 2,640, respectively. Till 1959-60 the Government Cottage Industries Emporium at Aurangabad used to lift the entire produce of Himroo cloth but due to certain administrative and financial difficulties it could not take over the entire production in the following year with resultant fall in production and sale both in that year. The production and sale of Himroo cloth during the period 1956-57 to 1960-61 is represented in the following graphs:—

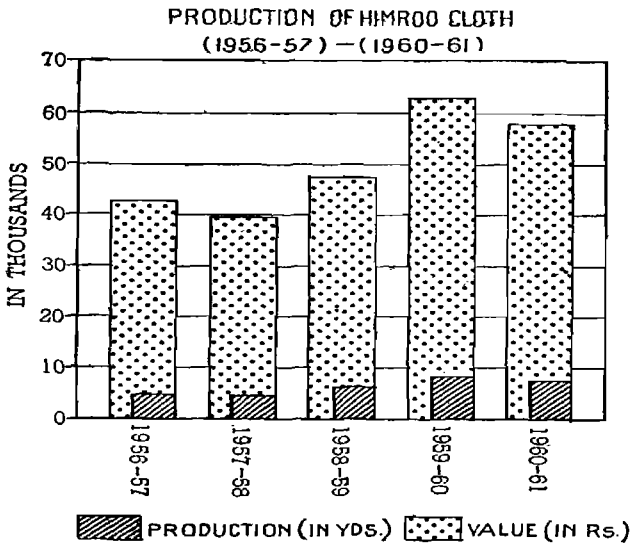

The Aurangabad District Industrial Co-operative Association which deals in the production of Himroo cloth in Khadi only, produced Himroo shawls in Khadi valued at Rs. 3,021 during 1960-61.

The five proprietary establishments produced Himroo shawls during the year 1960-61 estimated at Rs. 20,400 in 1960-61 and their sales in the year 1960-61 amounted to Rs. 20,400.

The total production and sales of Himroo shawls in the year 1960-61 thus came to Rs. 81,159 and Rs. 82,311 as detailed below :—

Establishments	Production	Sales
	Rs.	Rs.
(1) Co-operative Societies/ Association ..	60,759	61,911
(2) Proprietary Concerns ..	20,400	20,400
Total ...	81,159	82,311

This does not include production of Himroo cloth on powerlooms. The total production of Himroo cloth in the year 1961-62 (including that on powerlooms) is estimated as per the draft report prepared by the All India Handicrafts Board, at Rs. 2,62,396 (Rs. 1,13,609 by the handloom sector and Rs. 1,48,787 by the powerloom sector).

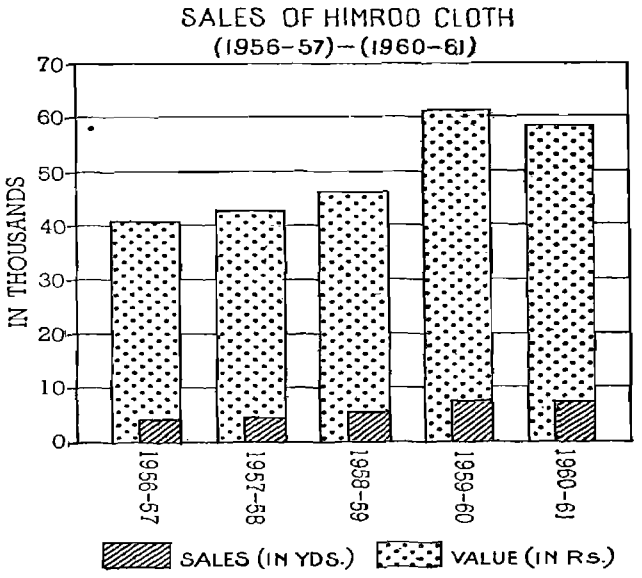

The Himroo and Nawabpura Industrial Weavers' Co-operative Society was found to have sold Himroo cloth worth Rs. 4,426·17 during the period 1st November 1961 to 30th November 1961. A detailed statement showing the designwise sales of Himroo fabric by the Society during this period is given in Appendix 2. It will be seen therefrom that the " Mango " and the " Big Mango " designs of which the production is sufficiently sizeable, are more popular amongst the customers.

Marketing

Aurangabad has of late assumed importance as a centre of tourism on account of the frescoes at Ajanta and archæological monuments and engravings at Ellora caves and the fort at Daulatabad in its vicinity. These monuments attract a large number of foreign tourists every year in addition to a large number of students from the neighbouring areas and travellers from all over India. Pieces of Himroo have naturally become a coveted possession, especially for the foreign tourists. It is estimated that about 35 per cent to 40 per cent of Himroo production is purchased by the tourists from abroad and 30 per cent to 35 per cent by the Indian tourists. The foreign tourists go directly to the show-rooms maintained by the two Co-operative Societies (which are adjacent to their weaving sheds) with a duel purpose, *viz.*, to witness the process of weaving and take photographs thereof and second to make purchases. The Cottage Industries Sales Emporium at Shahaganj in Aurangabad has also enough stocks of Himroo cloth for sale. It is reported that during the year 1961-62 the emporium sold Himroo shawls of the value of about Rs. 13,400. In the cloth market at Aurangabad also there are a few shops which sell Himroo cloth.

About 20 to 25 per cent of the annual stock of Himroo cloth finds its way to the markets at Bangalore, Bombay, Delhi, Poona and Calcutta.

The various Indian markets where Himroo has found its place are shown in the map at the beginning.

On sale to the customers the cloth is wrapped in ordinary paper and the use of plastic covers is made for packing only in case of bulk purchases. The packing is, however, not attractive though cotton cloth is used for the purpose when the cloth is to be carried over a long distance.

CONCLUSION

A perusal of the foregoing pages leads us to the following main conclusions :—

(1) The craft is still surviving at Aurangabad even though patronage to it slowly diminished with the deteriorating economic conditions of the Nawabs of former Hyderabad State in the late 19th century and the early 20th century.

(2) Craftsmen are not willing to engage their sons and younger generations in this craft because of unremunerative wages.

(3) The craft is monopolised by one particular religion only though the skill required to weave ordinary cloth is found among members of other religions, e.g., Koshtis among Hindus.

The craft is slowly decaying for more than one reason. In the first place the workers are not getting adequate wages commensurate with the skill they possess. We have already seen that the average daily wage of a weaver is not more than Rs. 2·50 a day. Since the craftsmen belong to Muslim religion the female participation either in this craft or in any other gainful activity is nil. Thus it is not possible for a craftsman to maintain a family in this meagre income. The increase in wages, especially of the weavers is justified if we see the actual process of weaving which is not only time consuming and laborious one but also monotonous at times. The slow process can be judged by the average output of woven cloth per day which is as follows :—

Type of cloth	Cloth woven in a day (Inches)
One-colour shawl	29
Two-colour shawl	24
Three-colour shawl	18

Thus with the increase in the number of colours introduced in a shawl the daily output diminishes.

This craft is seriously handicapped because of the severe competition it has to face from the powerloom sector which also produces the same type of cloth

Since the customers are not in a position to make a distinction between a Himroo cloth produced on handlooms and a similar one manufactured on a powerloom, the merchants invariably try to pass off the latter variety as Himroo cloth. The cloth produced on powerlooms is cheaper and hence it can sell at a lower rate in the market.

The machinery, especially the loom etc., has not undergone any modernization. It is felt that the frame loom may improve the output since it gives more freedom to the limbs of the weaver. The use of Jacquard machine may, no doubt, reduce the cost of production but it will not display personal skill of the weaver.

Another way by which this craft can be set on firm footing is to popularize the cloth. This can be done by displaying the various designs of the cloth and shawls which are manufactured at Aurangabad at different exhibitions which are held from time to time. New uses of the cloth can also help to boost the demand for it. In this connection the proposal of holding fashion parades may be examined and given a trial. This cloth can be conveniently used for the skirts of girls, etc. A permanent show-room with dummy models decorated with Himroo cloth may certainly give due publicity to this cloth. Such show-rooms may be located not only at Aurangabad but elsewhere also.

The cloth can be popularized among the customers, especially the foreigners, if the designs, colour combination, texture, etc., appeal to the prospective buyers. In fact, research centres can give suitable guidance to the weavers on designs, etc.

The Government has assisted the co-operative societies and the association engaged in the craft by granting them loans and grants to the tune of Rs. 46,530. They should be in a position to improve the working conditions of the weavers and other employees since they have Government backing.

APPENDIX 1

Statement showing the time required for different processes to weave a Himroo cloth of size 30 yds. × 30"

Serial No.	Description of Process	Man-days required
1	2	3
1	Dyeing the yarn and drying	1·5
2	Winding the yarn on to bobbins	1·5
3	Warping process	0·5
4	Adjusting the warp on loom	1·5
5	Winding the woof on stalk pieces with the help of winding charkha.	5
6	Weaving { One colour	35 to 37
	Two colour	39 to 40
	Three colour	50 to 53

APPENDIX 2

Designwise Production and Sale of Himroo cloth

HIMROO AND NAWABPURA WEAVERS, INDUSTRIAL CO-OPERATIVE SOCIETY

Period : 1st November to 30th November 1961.

Serial No.	Type of cloth	Quantity produced	Sale		Remarks
			Quantity	Value	
1	2	3	4	5	6
		Yards	Yards	Rs.	
1	Modern bird	20	18	164·70	
2	Double bird	12	12	109·80	
3	Double bird	2	20	135·00	Previous Stock.
4	Mango design	86·6	113·5	964·75	Do.
5	Big Mango	81·5	84·5	554·25	Do.
6	Mango design (woollen base)	4·5	4·5	135·00	
7	Shamina design	12	21·8	184·88	Previous Stock.
8	Shamina design	..	23·3	151·13	Do.
9	Elephant design	..	4	34·00	Do.
10	Elephant design	..	4	26·00	Do.
11	Banarasi design	..	4	30·00	Do.
12	Banarasi design	35·5	37·4	224·22	Do.
13	Kashti design	25·5	25·3	233·56	
14	Small Kashti (woollen base)	16	..	..	
15	Kashti design	8	5·3	36·75	
16	Ahmadabadi	..	28·5	213·75	
17	Ahmadabadi	20·5	18	153·00	
18	Kashmiri	10	10	85·00	
19	Kashmiri	11·5	16·3	105·62	
20	Akbari design	14	16	136·00	
21	Akbari design	11	13·8	89·38	
22	Akbari design (woollen)	6	..	..	
23	Himroo tie	14 pieces	12 pieces	51·00	
24	Guldasta	5	6	55·50	
25	Guldasta	..	12	84·00	Previous Stock.
26	Chameli design	1·8	2·0	17·00	Do.
27	Ajanta Design	4	4	34·00	
28	Anarkali	..	3·8	31·88	Previous Stock.
29	Square Bird	2	4	34·00	Do.
30	Small Kashti	16·8	17	144·50	Do.
31	Diamond Mango	18	16	136·00	
32	Karanphul design	..	8	68·00	Previous Stock.
33	Mashru	..	1	3·50	Do.
			Total ..	4,426·17	

APPENDIX 3

Statement showing Retail Prices of Himroo Shawls at Aurangabad

Serial No.	Name of Design	Size	Retail price of each piece
			Rs.
1	Modern bird	30" × 72"	18·00
2	Double bird	30" × 72"	22·00
3	Mango Design	30" × 72"	16·00
4	Big Mango	25" × 72"	15·00
5	Mango Design (woollen base)	45" × 81"	62·00
6	Shamina Design	30" × 72"	19·00
7	Elephant Design	30" × 72"	19·00
8	Banarasi Design	25" × 72"	17·00
9	Kashti Design	30" × 72"	16·00
10	Ahmadabadi	30" × 72"	19·00
11	Kashmiri Design	30" × 72"	19·00
12	Akbari Design	30" × 72"	19·00
13	Guldasta Design	30" × 72"	21·00
14	Chameli Design	30" × 72"	19·00
15	Ajanta Design	30" × 72"	19·00
16	Anarkali Design	30" × 72"	18·00
17	Diamond Mango	30" × 72"	19·00
18	Karanphul Design	30" × 72"	19·00

APPENDIX 4

Statement showing Prices of raw material prevalent in 1960-61

Serial No.	Description	Wholesale rate per lb.	Retail rate per lb.
		Rs.	Rs.
1	2/60s Staple yarn	5·59	6·09
2	20s Cotton yarn	2·20	3·00
3	150d Art Silk yarn	9·86	10·25

BOMBAY : PRINTED AT THE GOVERNMENT CENTRAL PRESS